Chapter 7 Electrical Circuits & Layout Drawings, Wave form, Test Points Drawing	7.1 DVDR3510V Circuit Diagrams 687 KB 7.2 DVDR3510V PWB Layout, Test Point DWG, Wave forms Adobe Acrobat 7.0 Document
Chapter 8 Exploded View and Service Parts List	8.1 DVDR3510V Mechanical Exploded View 3139-249-4... Adobe Acrobat 7.0 Document 8.2 DVDR3510V Service Parts List Adobe Acrobat 7.0 Document
Funai VCR Module (2422 549 01124) (For Information only)	VCR_Module_HK100ED_2422_ Adobe Acrobat 7.0 Document 4,318 KB

1. Technical Specifications and Connection Facilities

1.1. PCB Locations

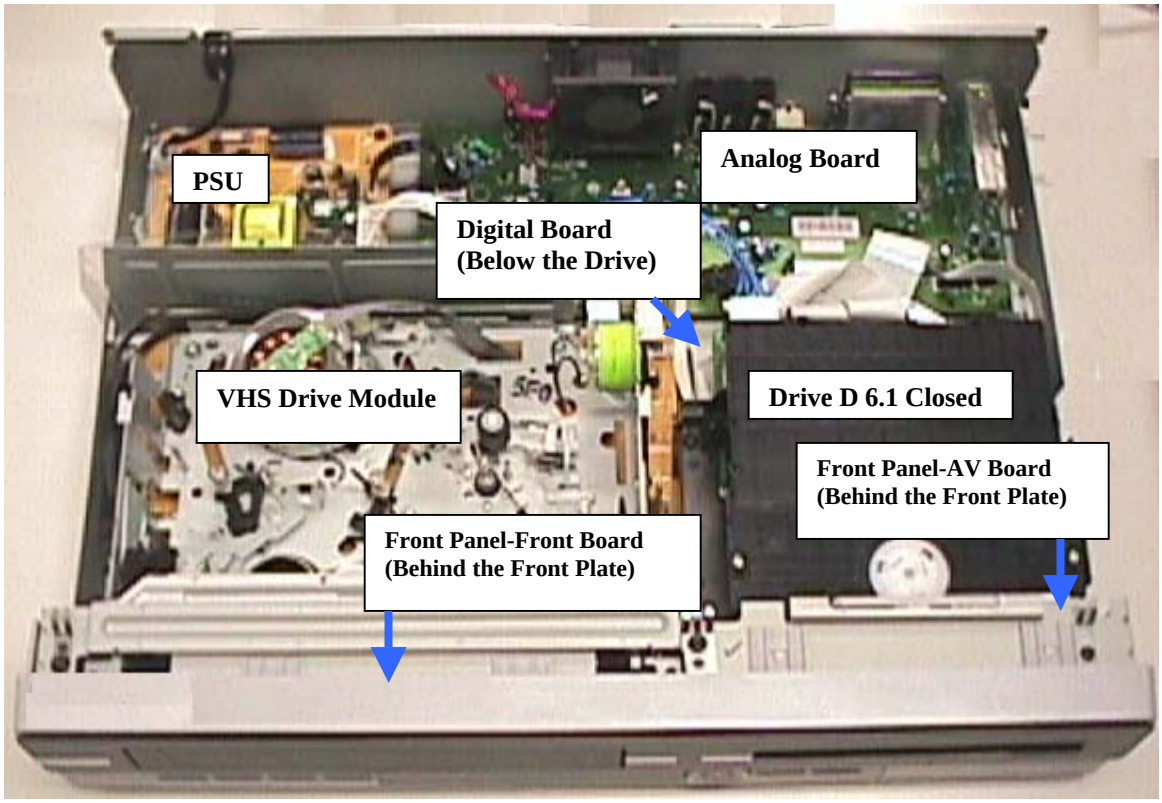

1.2. General

Mains voltage:	220-240 V
Mains frequency:	~50 Hz
Power consumption:	32 W typical
Standby Power consumption:	<5W

1.3. RF Tuner

1.3.1. RF Tuner (Analogue)

Test equipment: Fluke 54200 TV Signal generator
Test streams: PAL BG Philips Standard test pattern

1.3.1.1. System

B/G, I, L/L', D/K

1.3.1.2. RF – Loop Through:

Frequency range:	43 MHz – 860 M Hz
Gain (ANT IN – ANT OUT) without amplifier:	-4 dB ± 2 dB
Gain (ANT IN – ANT OUT) with amplifier:	From 2 dB + 3 dB until 2 dB – 2 dB

1.3.2. Receiver

Output of Euro connector/Cinch to be used for measurements (direct output from front end)

Video Performance:

Frequency response (0 - 4.4 MHz):	0 ± 4dB
Group delay (0 - 4.4 MHz):	0 ± 150 nsec

Audio Performance (Analogue Mono):

Frequency response (0 – 4.4 MHz):	0 ± 3dB
S/N Ratio unweighted (quasi peak, 22Hz – 22kHz):	≥ 40 dB
S/N Ratio weighted (quasi peak, CCIR 468):	≥ 45 dB
Harmonic distortion at 1kHz: FM± 25 kHz:	≤ 1.5 %
Harmonic distortion at 1kHz: AM: m = 54% (L/L'):	≤ 2 %

Audio Performance (NICAM Stereo/Dual)

Frequency response (40 Hz - 15 kHz):	0 ± 3dB
(Relative to 1 kHz)	
S/N Ratio unweighted (quasi peak, 22Hz – 22kHz):	≥ 65 dB
S/N Ratio weighted (quasi peak, CCIR 468):	≥ 70 dB
Harmonic distortion at 1kHz:	≤ 0.5 %
(Headroom: system I - 21.1dB all others - 16.5db)	
Channel Separation:	≥ 45 dB

1.3.3. Tuning

Tuning Frequency Range:	45.25 MHz – 857 MHz
Antenna Level for40dB S/N	
(video unweighted) at 75Ω:	< 40 dBµV (High End)
	≤ 60 dBµV (Low End)

Automatic Search Tuning

Scanning time auto search without RF Signal:	<2.5 min. (Typical 3 minutes)
Stop level (vision carrier):	≥ 40 dBµV
Maximum tuning error during operation (drift):	± 100 kHz
Maximum tuning error of a recalled program:	± 62.5 kHz

Tuning Principles:

Automatic system recognition (B/G, I, L/L', D/K)
Manual Selection in "Store" mode
Storage of frequencies at each random position number

1.4. Analog Inputs/Outputs

1.4.1. SCART 1 (Connected to TV)

Pin Signals:

1	Audio-out	R 1.8V RMS
2	Audio-out R	
3	Audio-out L	1.8V RMS
4	Audio GND	
5	Blue / Chroma GND	
6	Audio- in L	
7	Blue-out	0.7Vpp ± 0.1V into 75 W
8	Function switch	< 2V = TV > 4.5V / < 7V = asp. Ratio 16:9 DVD > 9.5V / < 12V = asp. Ratio 4:3 DVD
9	Green GND	
10	P50 control not use	
11	Green out	0.7Vpp ± 0.1V into 75W (*)

12	NC	
13	Red / Chroma GND	
14	Fast switch GND	
15	Red-out / Chroma-out	0.7Vpp ± 0.1V into 75W (*)
16	Fast switch RGB / CVBS or Y out	< 0.4V into 75W = CVBS >1V / < 3V into 75W = RGB
17	Y/CVBS GND OUT	
18	CVBS GND IN	
19	CVBS-out	1Vpp ± 0.1V into 75W(*)
20	CVBS-in	
21	Shield	

1.4.2. SCART 2 (Connected to AUX)

Pin Signals:

1	Audio-out	R 1.8V RMS
2	Audio-in R	
3	Audio-out L	1.8V RMS
4	Audio GND	
5	Blue / Chroma GND	
6	Audio-in L	
7	Blue-in	
8	Function switch	
9	Green GND	
10	NC	
11	Green-in	
12	NC	
13	Red / Chroma GND	
14	Fast switch GND	
15	Red-in/Chroma-in	
16	Fast switch RGB / CVBS or Y in	
17	CVBS-OUT GND	
18	Y/CVBS in GND	
19	CVBS out sync	1Vpp ± 0.1V into 75Ω
20	CVBS in / Y-in	
21	Shield	

1.4.3. Audio/Video Front Input Connectors

AUDIO – Cinch (L/R)

Input voltage:	2.2Vrms max
Input impedance:	> 10kΩ

VIDEO - Cinch

Input voltage:	1Vpp ± 3dB
Input impedance:	75Ω

1.4.4. AUDIO/VIDEO OUT Connectors

VIDEO (CVBS) – Cinch

Output Voltage:	1Vpp ± 3dB
Output impedance:	75Ω

S-VIDEO (Y/C) - Hosiden

According to IEC 933-5
Superimposed DC-level on pin 4 (load > 100 kΩ)
<2.4V is detected as 4:3 aspect ratio
>3.5V is detected as 16:9 aspect ratio

Output Voltage Y:	1Vpp ± 3dB
Output Impedance Y:	75Ω
Output Voltage C:	300mVpp ± 3dB

Output Impedance C: 75Ω

AUDIO – Cinch (L/R)

Output voltage: 2Vrms max.
Output impedance: > 10kΩ

1.4.5. AUDIO OUT – Cinch (L/R)

Output voltage: 2Vrms max.
Output impedance: > 10kΩ

1.4.6. COMPONENT VIDEO OUT – Cinch (Y/Pb/Pr)

According to EIO-770-I-A, EIA-770-2

1.5. Digital Inputs/Outputs

1.5.1. IEEE 1394 Digital Video Input (DV IN)

Implementation standard according:
IEEE Std 1394-1995
IEC61883 - Part1
IEC61883 - Part 2 SD-DVCR (02-01-1997)

Specification of consumer use digital VCR's using 6.3mm magnetic tape – dec.1994
Mechanical connection according to Annex of IEC 61883-1

1.5.2. USB

Compatibility: USB 1.1
Type of connector: Series A Connector

1.5.3. DIGITAL AUDIO OUT COAXIAL – Cinch

LPCM: according IEC 60958
MPEG 1, MPEG 2, AC3: according IEC 61937
DTS: according IEC 61937 + addendum

1.6. Video Performance

1.6.1. SNR

PAL

RGB	CVBS	Y/C
≥ 55 dB	Lumincance: ≥ 55 dB Chroma: ≥ 55 dB (AM) ≥ 52 dB (PM)	Y: ≥ 57 dB C: ≥ 57 dB (AM) ≥ 54 dB (PM)

NTSC

Y Pb Pr	CVBS	Y/C
≥ 55dB	Lumincance:≥ 55 dB Chroma: ≥ 54 dB (AM) ≥ 54dB (PM)	Y: ≥ 55 dB C: ≥ 54 dB (AM) ≥ 54 dB (PM)

1.6.2. Bandwidth

PAL

RGB	CVBS	Y/C
0.5-4 MHz:+1dB/-2dB 4.8 MHz:-3dB 5.8 MHz:-6dB	0.5-4 MHz:+1dB/-2dB 4.8 MHz:-3dB 5.8 MHz:-6dB	Y:4.8MHz-3dB C:700 kHz

NTSC

YPbPr	CVBS	Y/C
4.2 MHz:-3dB 5.8 MHz:-6dB With Pscan: 8.4MHz -3dB	4.2 MHz:-3dB 5.8 MHz:-6dB	Y:4.2 MHz -3 dB C:≥ 700 kHz

1.7. Audio Performance CDDA (PCM)

Cinch Output Rear

Output voltage 2 channel mode:	2Vrms ± 1dB
Channel unbalance (1kHz):	≤ |0.22| dB (0.05V)
Crosstalk 1kHz:	≥ |100| dB
Crosstalk 16Hz-20kHz:	≥ |90| dB
Frequency response:	≤ |0.2| dB
Frequency response with de-emphasis:	≤ |0.5| dB
Signal to noise ratio (unweighted):	≤ - 95 dB
Signal to noise ratio (A-weighted):	≤ - 100 dB
Signal to noise ratio (unweighted):	≤ - 115 dB
Dynamic range 1kHz:	≥ |90| dB
Distortion and noise 1kHz:	≤ -85 dB
Distortion and noise 16Hz-20kHz:	≤ -85dB
Intermodulation distortion:	≤ 0.002 % (60 Hz and 7 kHz)
Intermodulation distortion:	≤ 0.002 % (-94 dB) (19 kHz and 20 kHz)
Phase Difference between channels:	1 sample
Phase non-linearity:	± 2°
Level non-linearity (-60dB to –90dB):	≤ |1.0| dB
Output polarity	7FFF (H) positive pulse at output 8000 (H) negative pulse at output
Mute:	≤ -95 dB (during spin-up, spin-down, pause and access)
Outband attenuation:	≤ -40 dB above 30 kHz

1.7.1. Scart Audio

Output voltage 2 channel mode:	1.6Vrms ± 2dB
Channel unbalance (1kHz):	< 1dB
Crosstalk 1kHz:	> 85dB
Crosstalk 16Hz-20kHz:	> 70dB
Frequency response 20Hz-20kHz:	± 0.5dB max
Signal to noise ratio:	> 80dB
Dynamic range 1kHz:	> 75dB
Distortion and noise 1kHz:	> 75dB
Distortion and noise 16Hz-20kHz:	> 50dB
Intermodulation distortion:	> 70dB
Mute:	> 80dB

1.8. Dimension and Weight

Set Dimension (w x h x d): 435 x 100 x 344 mm
Weight: 5.2 kg

1.9. Laser Output Power & Wavelength

1.9.1. DVD

Output power during reading:	0.8mW
Output power during writing:	20mW
Wavelength:	650nm

1.9.2. CD

Output power:	0.3mW
Wavelength:	780nm

1.10. Playability

Video Playback		
1	Disc playback media: CD, CD-R/-RW, DVD, DVD-Video, DVD+R/+RW, DVD-R/-RW SVCD, Video CD, DVD+R DL	X
2	Compression formats: MPEG2, MPEG1, DivX 3/4/5/6	X
3	Video disc playback system: NTSC, PAL Video tape playback system: PAL, SECAM, ME-SECAM, NTSC	X
Audio Playback		
1	Disc playback media: CD, CD-R/-RW, MP3-CD, MP3-DVD, WMA	X
2	Compression formats: Dolby Digital, MP3, MPEG2 Multichannel, PCM	X
3	MP3 bit rates: 32~256 kbps and VBR	X
Still Picture Playback		
n	Disc formats: DVD+R/+RW, DVD-R/-RW, CD-R/RW	X
2	Picture Compression Format: JPEG	X
3	Picture enhancement: Rotate, Zoom, Slideshow with music playback	X

1.11. Supported Disc Types and Media Speed for Recording

Disc	Media speeds
DVD+R	1x - 16x
DVD+RW	2.4x - 8x
DVD-R	1x - 16x
DVD-RW	2.4x - 6x
DVD+R DL	2.4x

1.12. VHS Drive Technical Specifications

1.12.1. Servo

Drum Clock Phase Chaning Time:	6.5 H
WOW Flutter R/P (CCIR WTD):	0.3%
Jitter:	0.07 μs

1.12.2. Video

Output Level(R/P EBU Full Color Bar) at 75Ω:	1 Vpp
Resolution (R/P monochronous scope W/O burst:	230 lines
Signal to Noise Ratio (Y-Band):	43 dB
(C AM):	41 dB
(C PM):	38 dB

1.12.3. Normal Audio

Output Level(R/P Input 1KHz – 10dBv):	-5dBμv
S/N :	40dB
Distortion ratio:	1.5%
Frequency Response(at reference 1KHz,-20dBv)	
At 200Hz:	-3dB
At 6kHz:	-3dB

1.12.4. HiFi Audio

Output Level:	-9dBv
Dynamic range(R/P JIS A):	80dB
Frequency Response (at reference R/P Input 1KHz –20dBv)	
At 20Hz:	0dB
Frequency Response (at reference R/P Input 1KHz –20dBv)	
At 20KHz:	0dB
Distortion (at reference R/P Input 1KHz –10dBv):	0.5%

2. Safety Information, General Notes & Lead Free Requirements

2.1 Safety Instructions

2.1.1 General Safety

Safety regulations require that during a repair:
- Connect the unit to the mains via an isolation transformer.
- Replace safety components, indicated by the symbol ⚠, only by components identical to the original ones. Any other component substitution (other than original type) may increase risk of fire or electrical shock hazard.

Safety regulations require that after a repair, you must return the unit in its original condition. Pay, in particular, attention to the following points:
- Route the wires/cables correctly, and fix them with the mounted cable clamps.
- Check the insulation of the mains lead for external damage.
- Check the electrical DC resistance between the mains plug and the secondary side:
  1. Unplug the mains cord, and connect a wire between the two pins of the mains plug.
  2. Set the mains switch to the 'on' position (keep the mains cord unplugged!).
  3. Measure the resistance value between the mains plug and the front panel, controls, and chassis bottom.
  4. Repair or correct unit when the resistance measurement is less than 1 MΩ.
  5. Verify this, before you return the unit to the customer/ user (ref. UL-standard no. 1492).
  6. Switch the unit 'off', and remove the wire between the two pins of the mains plug.

2.1.2 Laser Safety

This unit employs a laser. Only qualified service personnel may remove the cover, or attempt to service this device (due to possible eye injury).

Laser Device Unit

Type	:	Semiconductor laser GaAlAs
Wavelength	:	650 nm (DVD)
	:	780 nm (VCD/CD)
Output Power	:	20 mW (DVD+RW writing)
	:	0.8 mW (DVD reading)
	:	0.3 mW (VCD/CD reading)
Beam divergence	:	60 degree

Figure 2-1

Note: Use of controls or adjustments or performance of procedure other than those specified herein, may result in hazardous radiation exposure. Avoid direct exposure to beam.

2.2 Warnings

2.2.1 General

- All ICs and many other semiconductors are susceptible to electrostatic discharges (ESD, ⚠). Careless handling during repair can reduce life drastically. Make sure that, during repair, you are at the same potential as the mass of the set by a wristband with resistance. Keep components and tools at this same potential.
  Available ESD protection equipment:
  – Complete kit ESD3 (small tablemat, wristband, connection box, extension cable and earth cable) 4822 310 10671.
  – Wristband tester 4822 344 13999.
- Be careful during measurements in the live voltage section. The primary side of the power supply, including the heatsink, carries live mains voltage when you connect the player to the mains (even when the player is 'off'!). It is possible to touch copper tracks and/ or components in this unshielded primary area, when you service the player. Service personnel must take precautions to prevent touching this area or components in this area. A 'lightning stroke' and a stripe-marked printing on the printed wiring board, indicate the primary side of the power supply.
- Never replace modules, or components, while the unit is 'on'.

2.2.2 Laser

- The use of optical instruments with this product, will increase eye hazard.
- Only qualified service personnel may remove the cover or attempt to service this device, due to possible eye injury.
- Repair handling should take place as much as possible with a disc loaded inside the player.
- Text below is placed inside the unit, on the laser cover shield:

CAUTION VISIBLE AND INVISIBLE LASER RADIATION WHEN OPEN AVOID EXPOSURE TO BEAM
ADVARSEL SYNLIG OG USYNLIG LASERSTRÅLING VED ÅBNING UNDGÅ UDSÆTTELSE FOR STRÅLING
ADVARSEL SYNLIG OG USYNLIG LASERSTRÅLING NÅR DEKSEL ÅPNES UNNGÅ EKSPONERING FOR STRÅLEN
VARNING SYNLIG OCH OSYNLIG LASERSTRÅLNING NÄR DENNA DEL ÄR ÖPPNAD BETRAKTA EJ STRÅLEN
VARO! AVATTAESSA OLET ALTTIINA NÄKYVÄLLE JA NÄKYMÄTTÖMÄLLE LASER SÄTEILYLLE. ÄLÄ KATSO SÄTEESEEN
VORSICHT SICHTBARE UND UNSICHTBARE LASERSTRAHLUNG WENN ABDECKUNG GEÖFFNET NICHT DEM STRAHL AUSSETSEN
DANGER VISIBLE AND INVISIBLE LASER RADIATION WHEN OPEN AVOID DIRECT EXPOSURE TO BEAM
ATTENTION RAYONNEMENT LASER VISIBLE ET INVISIBLE EN CAS D'OUVERTURE EXPOSITION DANGEREUSE AU FAISCEAU

Figure 2-2

2.3 Lead Free Requirement

Information about Lead-free produced sets

Philips CE is starting production of lead-free sets from 1.1.2005 onwards.

INDENTIFICATION:

Regardless of special logo (not always indicated)

One must treat all sets from **1 Jan 2005** onwards, according next rules.

Example S/N:

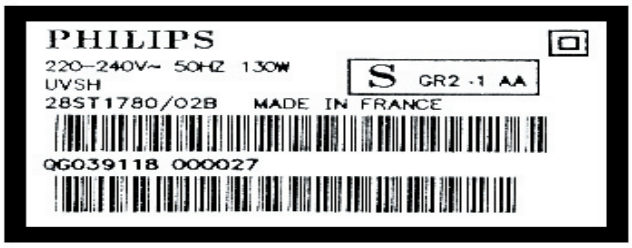

Bottom line of typeplate gives a 14-digit S/N. Digit 5&6 is the year, digit 7&8 is the week number, so in this case 1991 wk 18

So from 0501 onwards = from 1 Jan 2005 onwards

Important note: In fact also products of year 2004 must be treated in this way as long as you avoid mixing solder-alloys (leaded/ lead-free). So best to always use SAC305 and the higher temperatures belong to this.

Due to lead-free technology some rules have to be respected by the workshop during a repair:

- Use only lead-free solder alloy Philips SAC305 with order code 0622 149 00106. If lead-free solder-pate is required, please contact the manufacturer of your solder-equipment. In general use of solder-paste within workshops should be avoided because paste is not easy to store and to handle.
- Use only adequate solder tools applicable for lead-free solder alloy. The solder tool must be able
  - To reach at least a solder-temperature of 400°C,
  - To stabilize the adjusted temperature at the solder-tip
  - To exchange solder-tips for different applications.
- Adjust your solder tool so that a temperature around 360°C – 380°C is reached and stabilized at the solder joint. Heating-time of the solder-joint should not exceed ~ 4 sec. Avoid temperatures above 400°C otherwise wear-out of tips will rise drastically and flux-fluid will be destroyed. To avoid wear-out of tips switch off un-used equipment, or reduce heat.
- Mix of lead-free solder alloy / parts with leaded solder alloy / parts is possible but PHILIPS recommends strongly to avoid mixed solder alloy types (leaded and lead-free). If one cannot avoid or does not know whether product is lead-free, clean carefully the solder-joint from old solder alloy and re-solder with new solder alloy (SAC305).
- Use only original spare-parts listed in the Service-Manuals. Not listed standard-material (commodities) has to be purchased at external companies.
- Special information for BGA-ICs:
  - always use the 12nc-recognizable soldering temperature profile of the specific BGA (for de-soldering always use the lead-free temperature profile, in case of doubt)
  - lead free BGA-ICs will be delivered in so-called 'dry-packaging' (sealed pack including a silica gel pack) to protect the IC against moisture. After opening, dependent of MSL-level seen on indicator-label in the bag, the BGA-IC possibly still has to be baked dry. (MSL=Moisture Sensitivity Level). This will be communicated via AYS-website.
  Do not re-use BGAs at all.
- For sets produced before 1.1.2005 (except products of 2004), containing leaded solder-alloy and components, all needed spare-parts will be available till the end of the service-period. For repair of such sets nothing changes.
- On our website **www.atyourservice.ce.Philips.com** you find more information to:
  - BGA-de-/soldering (+ baking instructions)
  - Heating-profiles of BGAs and other ICs used in Philips-sets

  You will find this and more technical information within the "magazine", chapter "workshop news".

For additional questions please contact your local repair-helpdesk.

3 Enjoy

Start playback

A From a disc

1. Press **DVD** on the remote control.
2. Press **OPEN/CLOSE ⏏**, load a disc and close the disc tray.
3. Press **PLAY/PAUSE ▶II** to start playback.
4. To stop playback, press **STOP ■**.

B From a VHS tape

1. Press **VCR** on the remote control.
2. Insert a pre-record VHS tape into the tape deck. Press **REW ◀◀** to rewind the tape if necessary to the beginning of the recording.
3. Press **PLAY/PAUSE ▶II** to start playback.
4. To stop playback, press **STOP ■**.

Record mode (picture quality)	Hours of recording that can be stored on a 4.7GB disc	VHS tape
HQ (high quality)	1	Select between SP and LP mode.
SP (standard play)	2	
SPP (standard play plus)	2.5	
LP (long play)	3	
EP (extended play)	4	
SLP (super long play)	6	

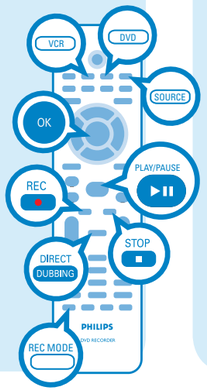

Start recording

A Record to DVD or VCR

1. Press **DVD** to record to a recordable DVD. *OR*, press **VCR** to record to a VHS tape.
2. Load in a blank recordable DVD to the disc tray or a VHS tape to the tape deck.
3. Press **SOURCE** repeatedly to select the source to record from (eg, TUNER, CAM1, DV, EXT1 or EXT2).
   - **To record a TV programme**, use **P + / −** on the remote control to select a programme channel.
4. Press **REC MODE** repeatedly to select a desired recording mode (refer to the Record Mode table).
5. Press **REC ●** to start recording.

   Note To set the recording time, press **REC ●** repeatedly to extend the recording time in 30 minute increments. The recording will stop automatically at the designated end time.

   - **To record from an external device**, press PLAY on the device to start playback.
6. To stop the recording, press **STOP ■**.

B Dubbing (VCR ⇄ DVD)

1. Press **VCR** to dub from VCR to DVD. *OR*, press **DVD** to dub from DVD to VCR.
2. Load in a blank recordable DVD to the disc tray or a VHS tape to the tape deck.
3. Press **DIRECT DUBBING**.

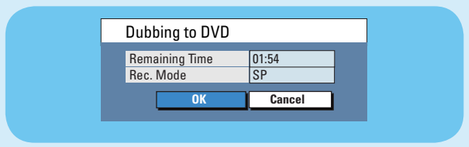

4. Select the desired recording mode, then move to OK in the menu and press **OK** on the remote control to start dubbing.
5. To stop the dubbing, press **STOP ■**.

Need help?

User Manual

See the user manual that came with your Philips recorder.

Online

Go to www.philips.com/support.

Be responsible
Respect copyrights

2007 © Koninklijke Philips N.V.
All rights reserved.

12 NC 3139 245 26221

Quick Start Guide

1 Connect
2 Set up
3 Enjoy

What's in the box?

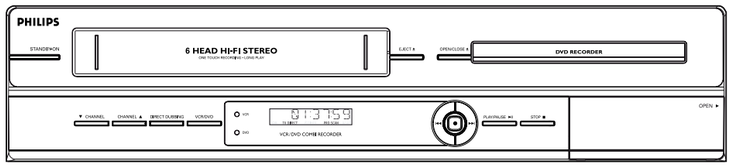

DVD Recorder / VCR

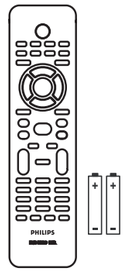

Remote Control and 2 batteries

RF Coaxial Cable

User Manual

PHILIPS

1 Connect

Basic Connection

Before Connecting

Select one of the following basic connections (A or B) according to the type of connecting devices you have.

If your TV is currently connected to a VCR, you have to unplug all the connections from your VCR and TV.
Your new Philips Recorder replaces the VCR for your recording needs.

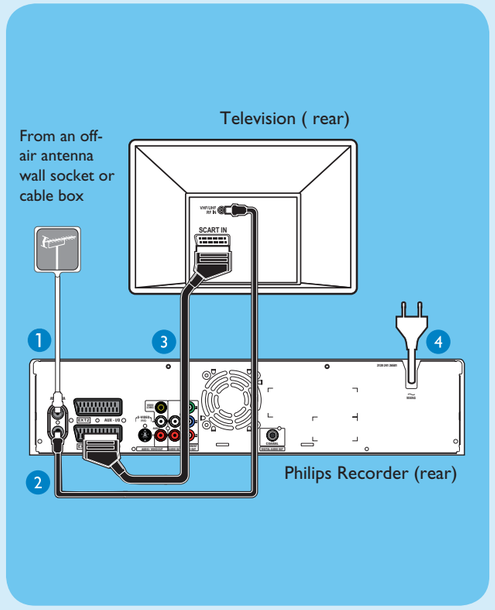

Option A

Use this connection if you are connecting the antenna cable directly from the antenna wall socket or from a Cable Box without a Scart output socket.

1. Unplug the antenna cable that is currently connected to your TV and plug in the antenna cable to the **ANTENNA** socket on this recorder.
2. Connect the supplied RF coaxial cable from the **TV** socket on this recorder to the Antenna In socket on the TV.
3. Connect a scart cable (not supplied) from the **EXT1 TO TV-I/O** socket on this recorder to the Scart input socket on your TV.
4. Plug in the power cable from the recorder to an AC power outlet.

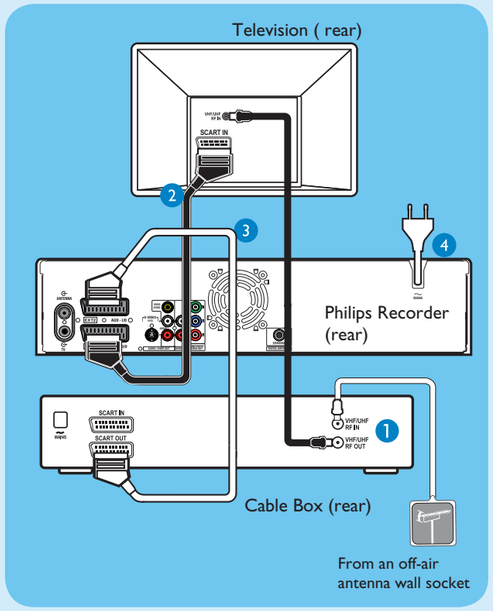

Option B

Use this connection if your current antenna cable is connecting through a Cable Box with Scart output socket.

1. Keep the existing antenna connection from the Cable box to your TV.
2. Connect a scart cable (not supplied) from the **EXT1 TO TV-I/O** socket on this recorder to the Scart input socket on your TV.
3. Connect another scart cable from the **EXT2 AUX-I/O** socket on this recorder to the Scart output socket on the Cable Box.
4. Plug in the power cable from the recorder to an AC power outlet.

Note See the accompanying user manual for other possible connections (e.g. Composite Video, Component Video, S-VIDEO).

2 Set up

A Finding the viewing channel

1. Press **STANDBY-ON** on the recorder.
2. Turn on the TV and other connected devices (e.g. Cable Box, Satellite Receiver).
3. If your TV does not switch to the correct viewing channel, press the Channel Down button (or AV, SELECT, button) on the TV's remote control repeatedly until you see the blue DVD background screen. This is the correct viewing channel for the recorder.

B Start basic setup

Use the recorder's remote control and follow the on-screen instructions to complete the installation.

1. Press **SETUP** on the remote control.

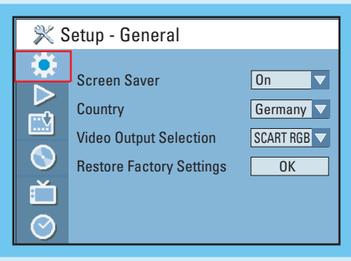

Note Use up ▲ and down ▼ keys to toggle through the options. Select an item by pressing right ▶. To confirm a setting, press **OK**.

2. Select the country of your residence.
   Highlight and press **right ▶**.
   Select { **Country** } and press **OK** to confirm your selection.

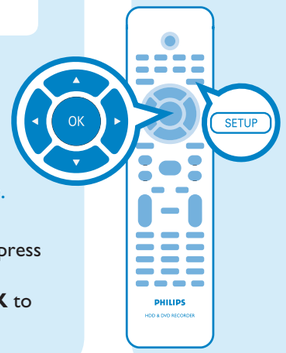

3. Select the recorder's menu display language.
   Highlight and press **right ▶**.
   Select { **On Screen Display Language** } and press **right ▶**.
   Select the desired language option and press **OK** to confirm your selection.

4. Setup and install TV channels.
   Highlight and press **right ▶**.
   Select { **Channel Search** } and press **OK** to start automatic TV channel search.

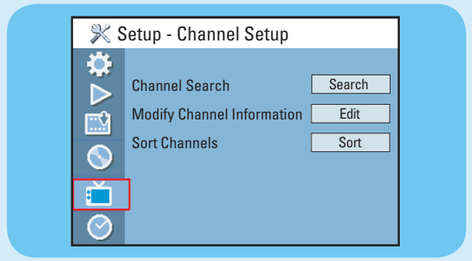

Note This process may take several minutes. Once complete, the total number of channels found and stored appears on the TV.

5. Set the date and time.
   Highlight and press **right ▶**.
   Select { **Date (dd/mm/yy)** } or { **Time (hh:mm:ss)** } and press **OK**. Use the **numeric keypad 0-9** to input the date/time, then press **OK** to confirm.

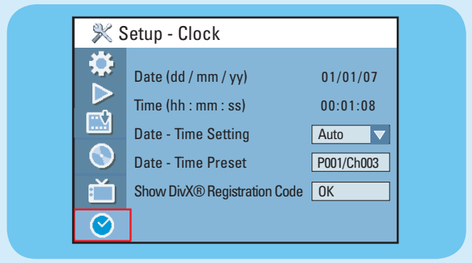

Note The settings will be updated according to the broadcast channel information of preset Programme Number 1.

6. Press **SETUP** to exit.

1. Mechanical Instructions

Note: The position numbers given here refers to the Exploded view on chapter 8.

1.1. Dismantling of the DVD Tray cover manually

1) Insert a screwdriver into the slot provided at the bottom of the set and push in the direction as shown in Figure1 to unlock before sliding the Tray cover 110 out.

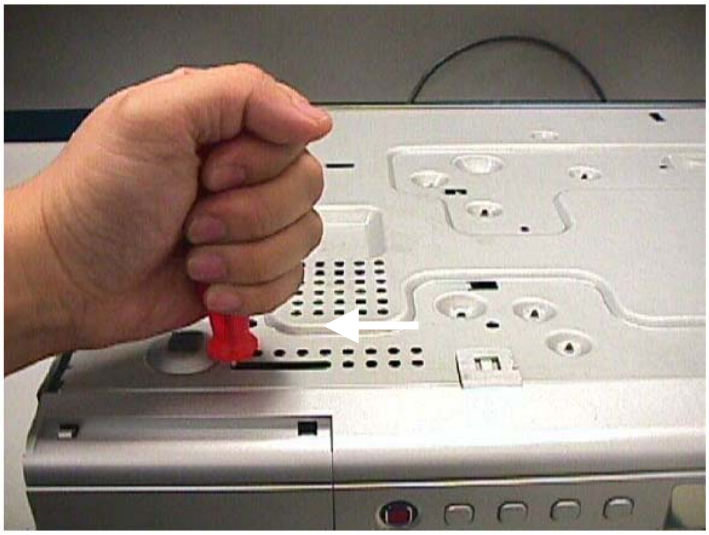

Figure 1- unlock the tray loader

2) Remove the Tray cover 110 as shown in Figure 2.

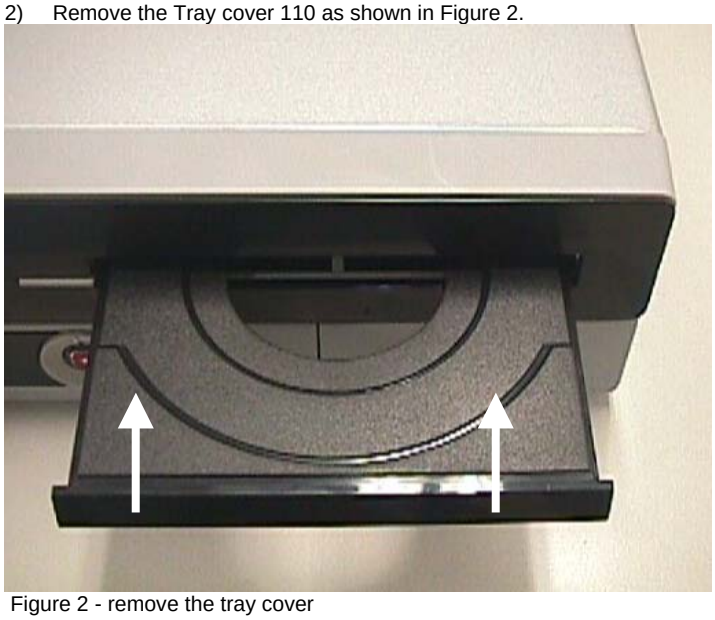

Figure 2 - remove the tray cover

1.2. Dismantling of the Front Panel

1) Remove 8 screws to loosen Top cover 240.
2) Release the catches and detach the Front Panel. The Front Panel service position is shown in Figure 3.

Notes: Beware of the cable clamp 213 while detaching the Front Panel and put it back in position after repair.

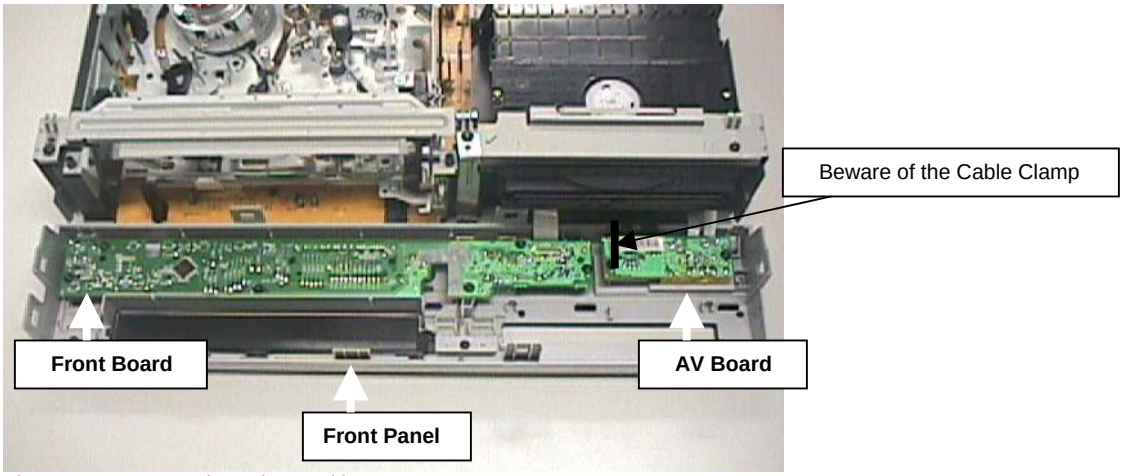

Figure 3 - Front Panel Service Position

1.3. Dismantling of the Basic Engine

1) Remove 4 screws to detach the Basic Engine 1005 from its Holder 180 as shown in figure 4.

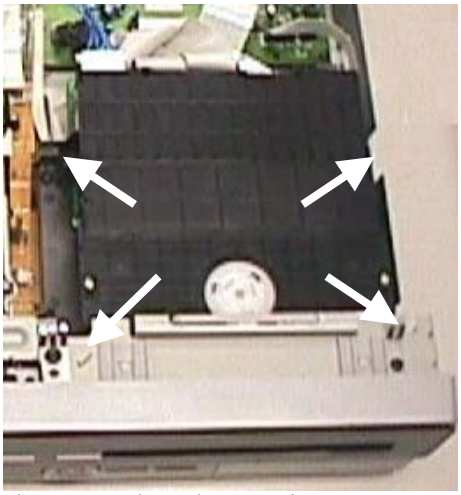
Figure 4 - Basic Engine mounting screws

2) Flip the Basic Engine over to remove 4 screws from the PCB protection plate. Service Position of the Basic Engine as shown in Figure 5.

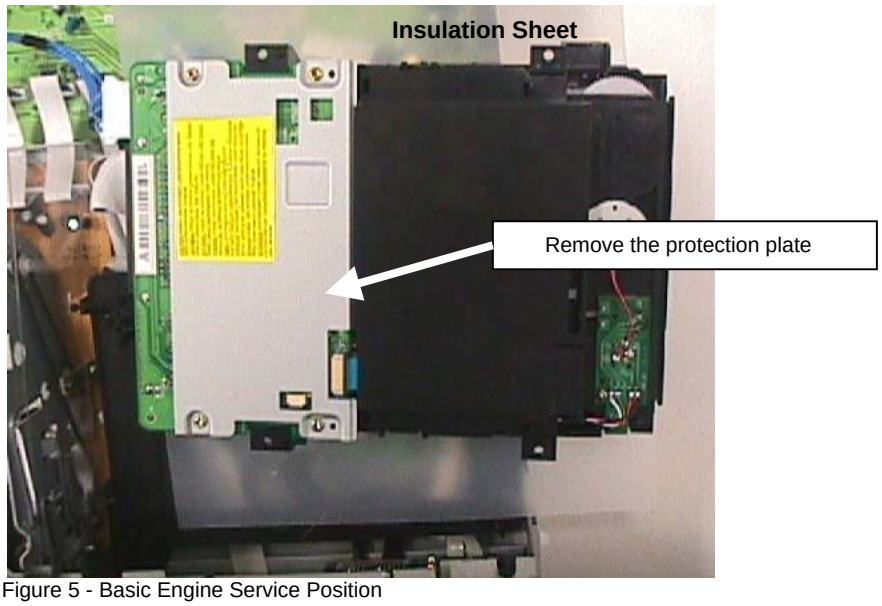

Figure 5 - Basic Engine Service Position

1.4. Dismantling of the Digital Board

1) In order to dismantle the Digital Board 1001, remove the Basic Engine assembly (180+1005) first. Remove the outer 4 screws and detach the Holder 180 together with Basic Engine 1005 as in figure 6.

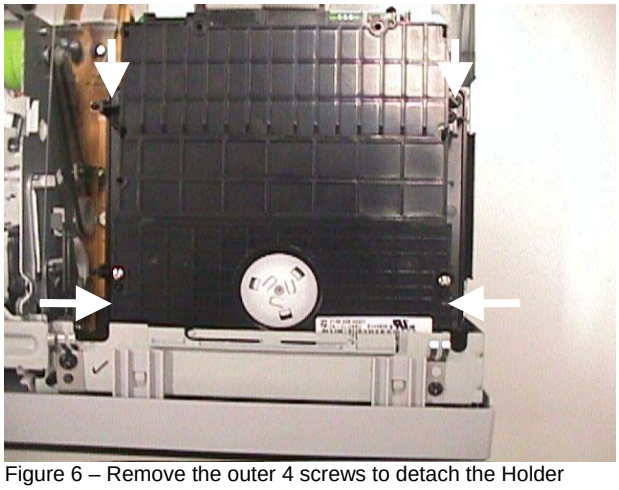

Figure 6 – Remove the outer 4 screws to detach the Holder

2) Then remove 4 screws to loosen the Digital Board 1001 as shown in Figure 9.

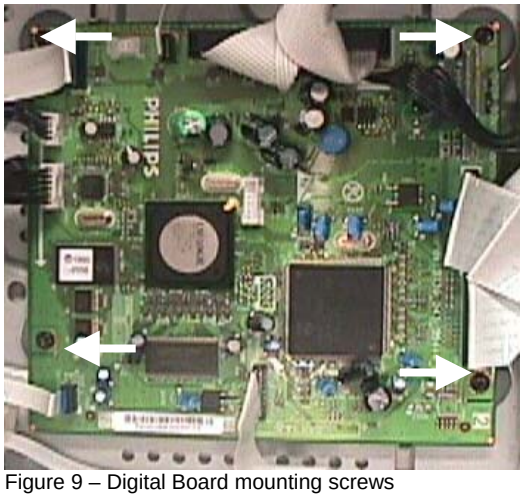

Figure 9 – Digital Board mounting screws

3) Service position for Digital Board is given in Figure 10. The Front Panel should be detached from the frame 162 so that the Digital Board could be flipped easily for service without interference.

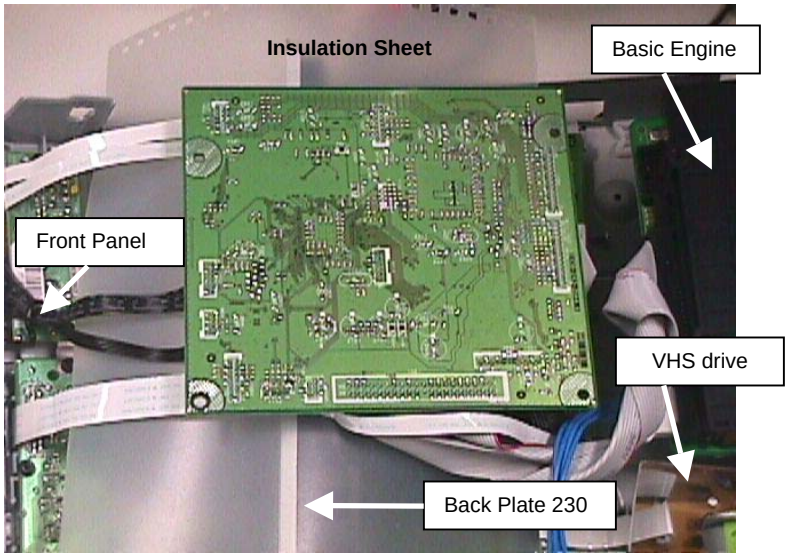

Figure 10 – Digital Board Service Position

1.5. Dismantling of the Analog Board

1) Remove 7 screws from the Rear Panel 230. Remove 3 more screws that attach the Analog Board to the Frame 162 and detach the Analogue Board 1002.
2) Detach the Rear Panel 230 together with the Fan 208 from the Frame 162 by removing 2 screws. Analogue Board Service Position is shown in Figure 13.

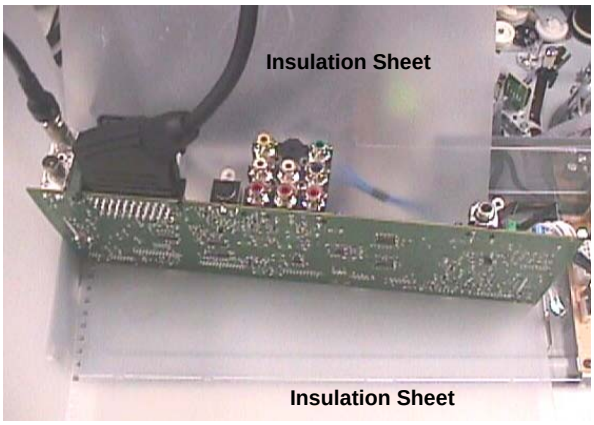

Figure 11 - Analogue Board Service Position (Rear Panel detached from the Frame)

1.6. Dismantling of the PSU Board

1) Remove 3 screws to loosen the PSU Board 1007 as shown in Figure 7.

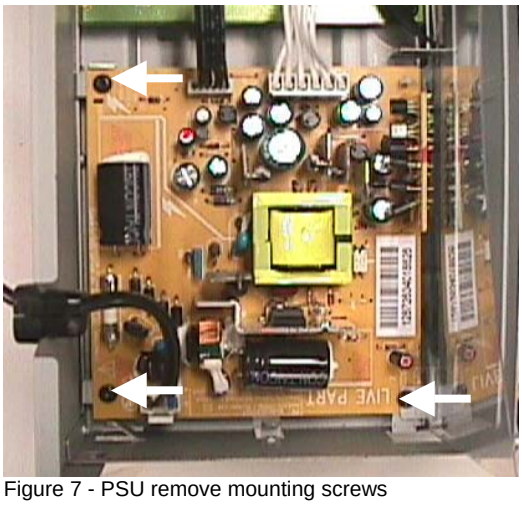

Figure 7 - PSU remove mounting screws

2) Service position for PSU Board is given in Figure 8.

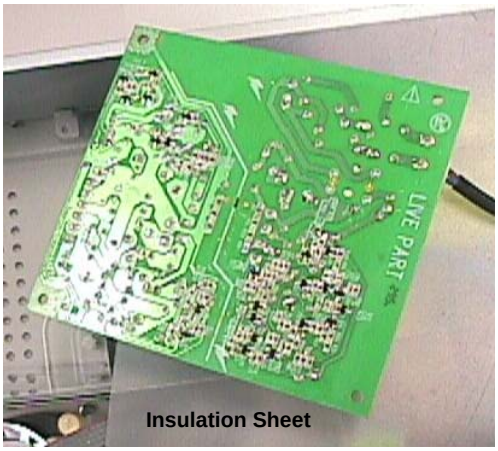

Figure 8 - PSU Board Service Position

1.7. Dismantling of the VHS Drive Module

1) To detach the VHS Drive Module 1006, it is necessary to detach the Front Panel first. Then remove the Top Bracket 190 by unscrewing 2 screws attached to the VHS Drive Module 1006 and 1 screw attached to the Frame 162. It is also necessary to remove the PSU Shield 210 together with VCR Thermal Shield 182 by unscrewing 4 screws. The mounting screws are shown in figure 9, 10 and 11.

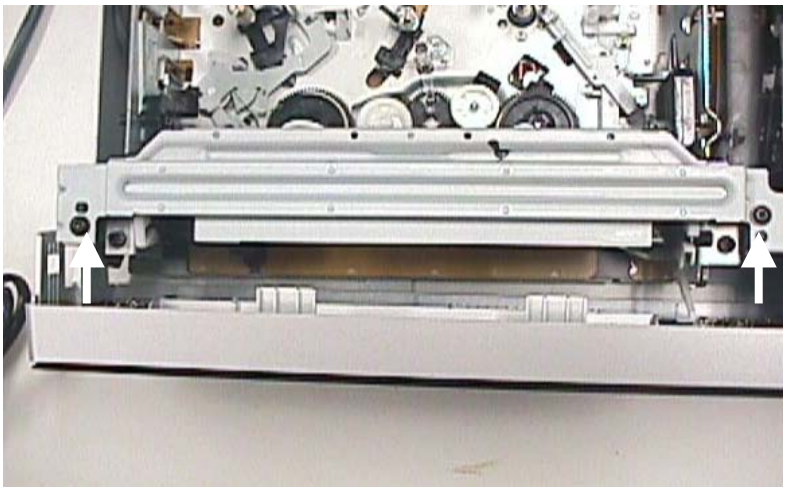

Figure 9 – Detach the Front Panel; unscrew the Top Bracket mounting screws

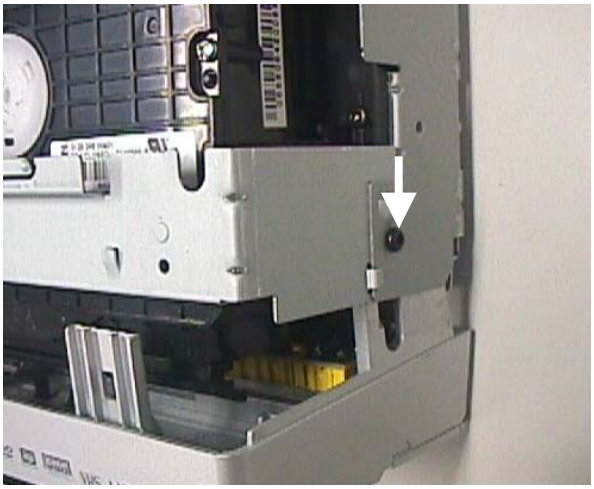

Figure 10 – Top Bracket mounting screw attached to the Frame

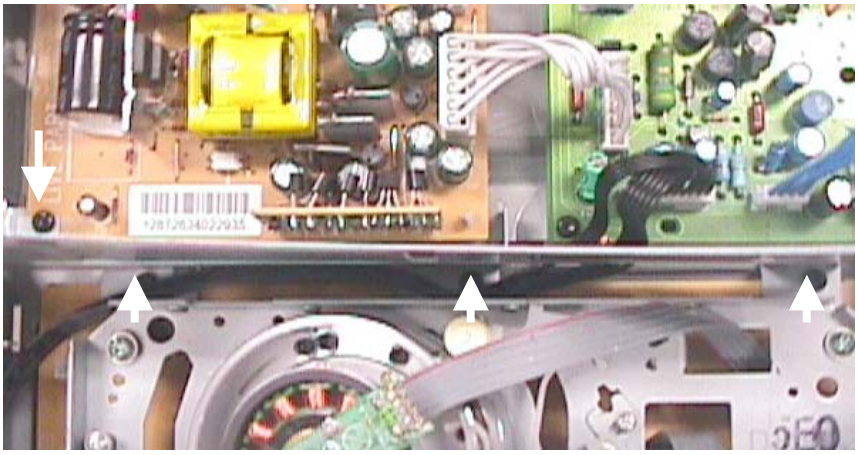

Figure 11 – PSU Shield mounting screws

2) Then detach the VHS Drive Module 1006 by unscrewing 5 screws as shown in Figure 11.

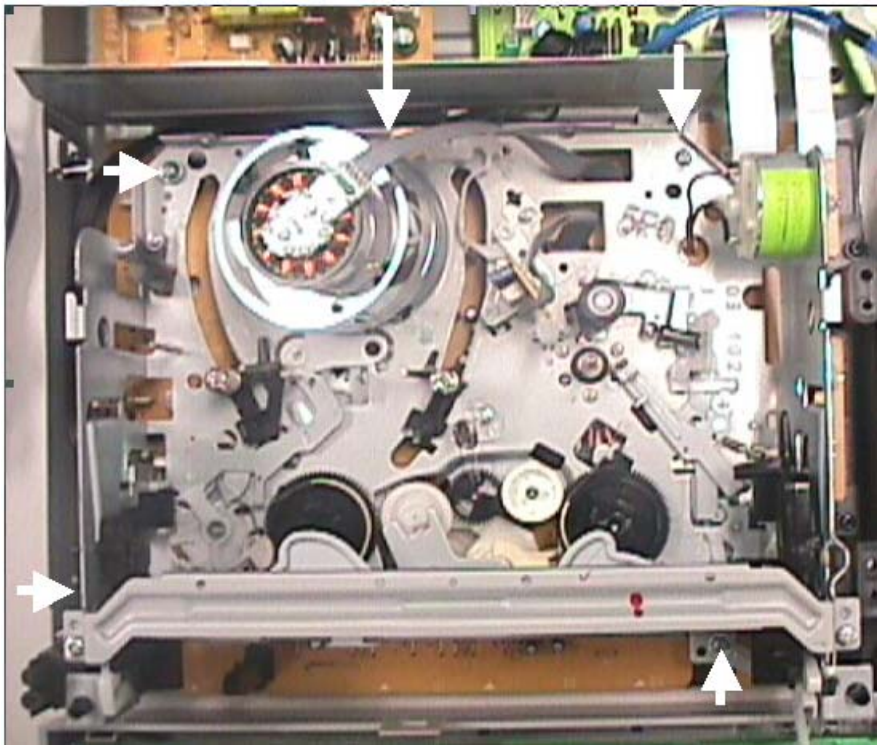

Figure 11 – VHS Module mounting screws

3) While unscrewing the cross screws, great care must be taken with the screw located near the helical drum at the VHS module to prevent accidental scratches to the drum shown in figure 12.

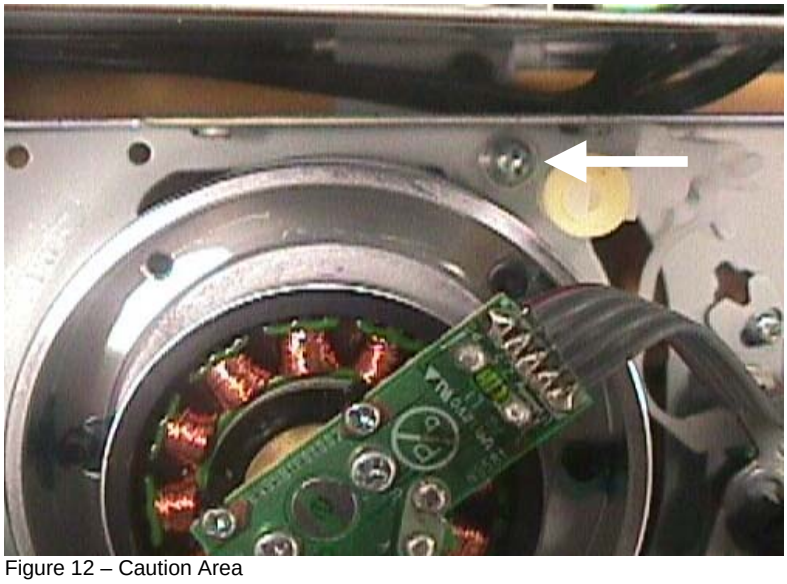

Figure 12 – Caution Area

4) Make the VCR module upright and Insulation sheet must be inserted onto the drum to prevent damage by contact to the Recorder frame shown in Figure 13.

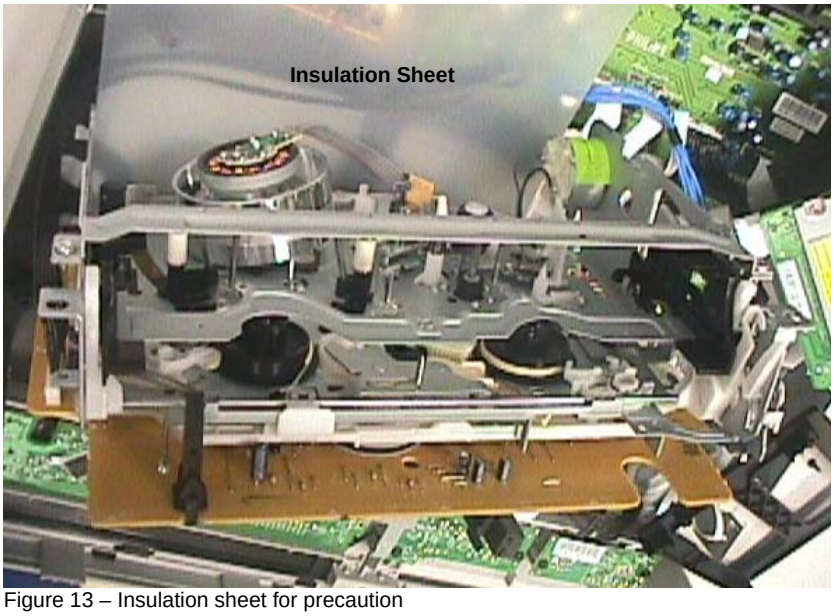

Figure 13 – Insulation sheet for precaution

5) Service Position for VHS Drive Module 1006 is given in figure 14.

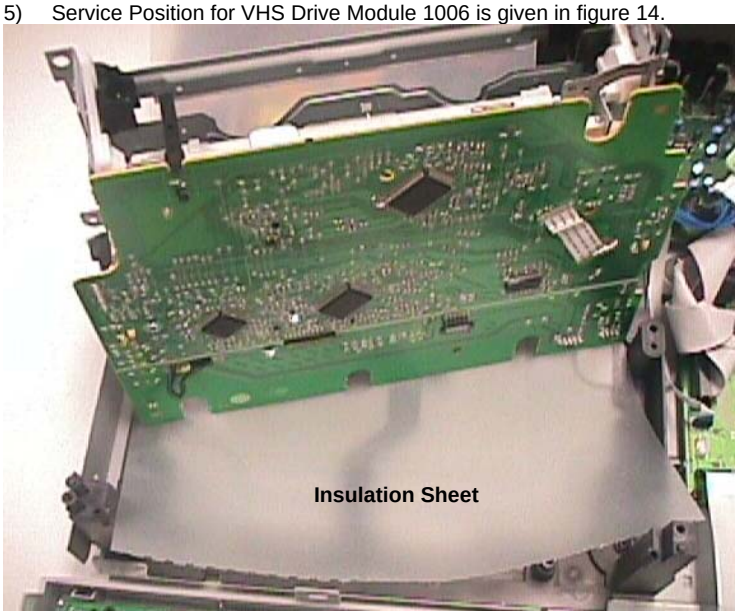

1. Firmware Upgrading

1.1. Preparation to upgrade firmware

- Download the latest software release package.
- Extract the files from ZIP archive (Do not rename the filename).
- Start the CD Burning Software and create a new CD project (data disc) with the following settings:
  - File System: Joliet
  - Format: MODE 1
  - Recording Mode: SINGLE SESSION (TRACK-AT-ONCE), FINALIZE CD

Note: Long file name is necessary for the preparation of the upgrade disc.

- Place the extracted file into the root directory of the new CD project.
- Burn the data onto the CDRs or CD-RWs.

Notes: Burn **ALL** the extracted files (backend ". CUB" and Front End ". BIN") onto a blank CD-R or CD-RW disc for firmware upgrade

1.2. Procedures to apply the System Software Upgrade and Loader Software Upgrade

- Open the tray and load the Upgrade CDROM with *Software upgrade file*.
- The tray will close and set will display: "*SW UPGD*"
- With the dialog box titled "Disc Upgrade", the OSD will display: *"Software Upgrade Disc detected. Select OK to start upgrading or CANCEL to exit"*
- Click on the <OK> button.
- The set will display: *" UPGRADING SW"*
- With the dialog box titled "Disc Upgrade", the OSD will display: First, *"Starting Software Upgrade. Please Wait "* and then *"Upgrading Software. Please wait. Do not switch off the power."*

The whole process may take up to 5 minutes.
Note: Do not press any button or interrupt the mains supply during the upgrading process, otherwise the set may become defective.

- When the system software upgrade is completed the set will display: *"SW DONE"*.
- With the dialog box titled "Disc Upgrade", the OSD will display: *"System Software has been successfully upgraded. Press OK to continue with Loader Software upgrade."*
- Press <OK>
- The set will display: *"DRV UPG"*
- With the dialog box titled "Loader Software Upgrade", the OSD will display: *" Software Upgrade Disc detected. Select OK to start upgrading or CANCEL to exit"*
- Click on the <OK> button.
- The set will display: *" DRIVE UPGRADING"*
- With the dialog box titled "Loader Software Upgrade", the OSD will display: *"Upgrading Software. Please wait. Do not switch off the power."*

The whole process may take up to 5 minutes.
Note: Do not press any buttons or interrupt the mains supply during the upgrading process, otherwise the set may become defective.

- When the loader software upgrade is completed the tray will open automatically and the set will display: *"DRV OK"*.
- With the dialog box titled "Loader Software Upgrade", the OSD will display: *"Loader Upgrade process has completed successfully. Press [OK] to reboot system"*
- Take out the upgrade disc, press <OK> and then the set goes to standby.

1.3. How to read out the firmware version to confirm set has been upgraded

- Power up the set and close tray with no disc.
- Press <0><0><0><9><OK> in succession, with 'No Disc' displayed on the OSD and VFD.
- The backend software version can be read off from the start of message. Drive firmware version can be read off from field: "Drive".
- The figure below shows the version info displayed by DVDR3510V/31 running V02_03 backend software and drive firmware is 61.06.01.10.

Figure : Firmware Information shown by DVDR3510V/31

DVDR3510V_V02_03, Region: 2, Drive: 61.06.01.
10. Build: 4726 Jan 18 2007, 16:22:00 Stroke: 31

2. Restoration of Digital Borad Setting after repair

Restore the Dynamic Stroke Version

It is important to restore the Dynamic Stroke version of the set before returning the repaired set back to the customer. Restoring this stroke version will ensure that the set is correctly set for the region.

Recorders are configured to a desired stroke version by entering a pre-defined RC key sequence.

The RC key sequence is made up of 2 parts: <XXXX> + <YY>, where <XXXX> refers to a platform and <YY> refers to the stroke version. Follow the steps below to change dynamic stroke versions:

- Close DVD tray with no disc.
- Enter the following RC sequence:
  - <3> <5> <1> <0> <0> <5> <OK> for /05
  - <3> <5> <1> <0> <3> <1> <OK> for /31
  - <3> <5> <1> <0> <5> <1> <OK> for /51
  - <3> <5> <1> <0> <5> <8> <OK> for /58
- When the RC command is accepted successfully, the message “Stroke Version Changed. Current stroke version: <YY>” is displayed on the OSD.
- Confirm the stoke version change by checking the software version. (use the procedures in article 1.3 to check software stroke version)

3. Other Useful Firmware Hints

3.1. VFD test

This feature is to light on all the VFD segments in the local display for a few seconds.
To test the VFD, follow the steps below:

- Close DVD tray with no disc.
- Enter code <0><0><0><1><OK> in succession.
- When the command is accepted, all the LEDs and VFD segments on the local display will light up.
- The VFD test will time out and revert back to the “No Disc” screen in 10 seconds.

Set Block Diagram

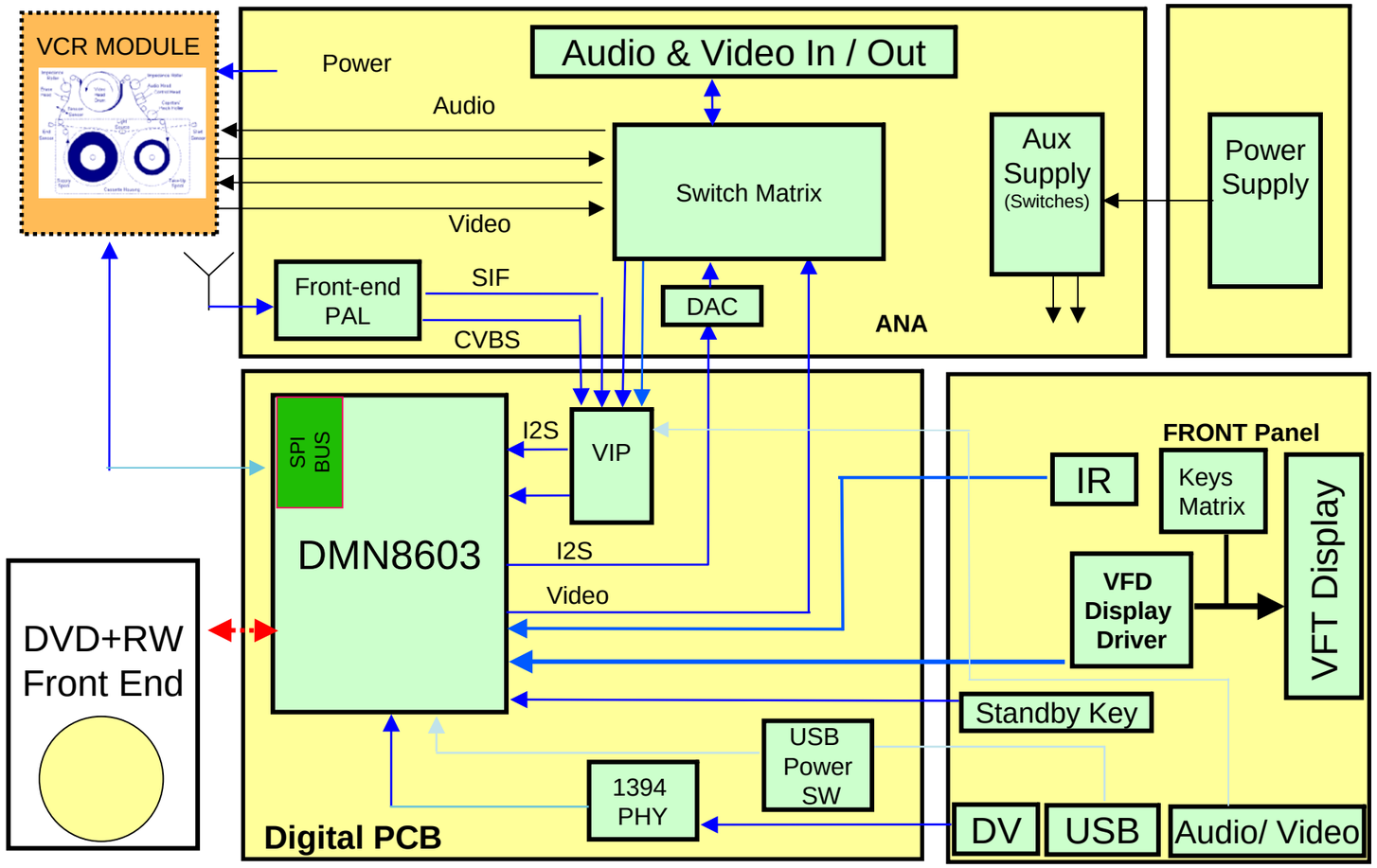

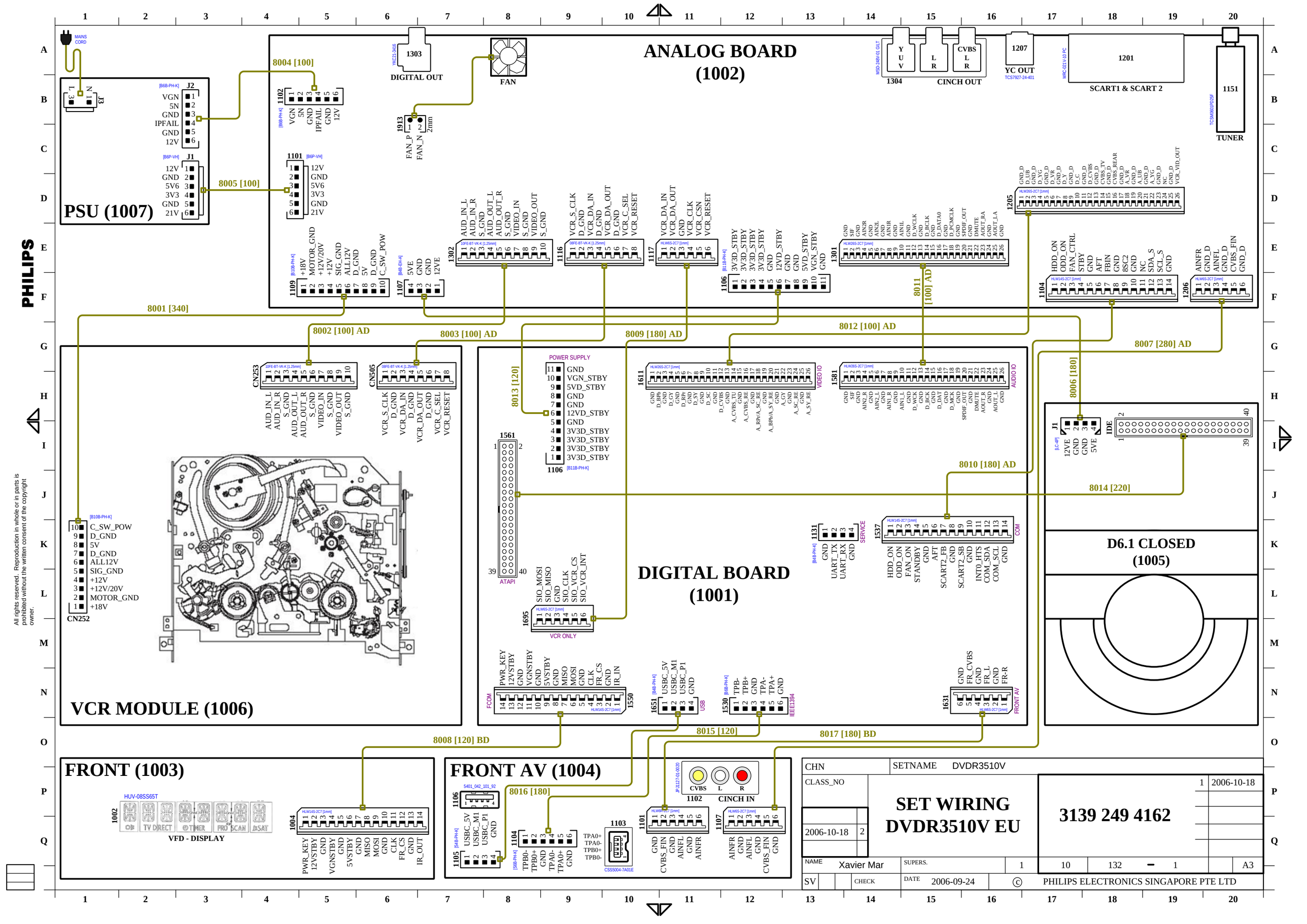

All rights reserved. Reproduction in whole or in parts is prohibited without the written consent of the copyright owner.

Layout: Analog (Top View)

1101 D1	1121 A3	2104 B3	2131 D3	2216 B13	2233 B13	2295 B8	2348 A3	2374 C11	3150 A2	3207 B12	3234 A10	3276 D13	3360 A4	5151 D14	6301 A4	7165 D6	7212 D13
1102 B1	1151 A14	2106 C4	2132 D4	2218 B12	2235 B9	2297 B8	2349 A3	2376 A4	3160 D5	3208 B12	3235 A10	3277 B4	3361 A4	5152 E14	6302 A4	7167 D6	7218 B9
1104 E13	1201 A12	2107 C3	2151 D14	2219 C12	2236 B9	2298 B7	2350 C9	3114 D3	3161 D6	3209 A10	3237 A10	3278 B4	3362 A4	5201 C13	6303 A4	7168 D6	7270 B8
1106 E8	1205 D12	2108 E1	2154 D14	2220 C13	2256 B9	2309 B12	2351 D9	3115 D3	3162 D6	3216 A10	3238 A10	3279 B13	3372 A4	5202 B12	6304 A4	7169 D6	7312 A4
1107 E3	1206 E14	2110 A2	2157 B14	2221 C13	2258 A9	2310 B11	2352 E9	3116 D3	3163 D6	3218 D14	3239 A10	3351 A3	3373 A4	5270 B8	6306 A4	7201 A10	7317 A4
1108 C3	1207 A10	2111 E4	2204 E13	2222 C12	2259 A9	2319 B10	2353 E8	3117 C2	3164 D6	3224 A4	3240 A10	3352 A3	4201 D13	5301 D11	6307 A4	7203 A10	7318 A4
1109 E2	1301 E10	2113 E4	2207 D13	2226 B12	2260 A10	2320 B10	2354 D9	3121 A2	3165 D6	3225 C12	3241 A10	3353 A3	4202 A10	6102 C1	7114 D2	7205 A10	7321 B4
1111 A2	1302 E5	2115 E3	2208 D13	2227 C12	2261 A10	2321 C9	2361 A4	3122 A2	3167 D7	3226 B12	3243 A10	3354 A3	5102 D2	6103 C2	7115 B4	7206 A10	7322 A3
1112 B1	1303 A2	2116 D1	2209 D13	2228 C14	2281 A8	2329 D10	2363 E12	3123 A2	3168 D6	3227 A10	3244 A10	3355 A3	5110 D1	6104 D1	7116 A2	7207 A10	7323 A4
1113 B2	1304 A8	2117 A2	2210 A4	2229 D14	2282 A7	2336 C8	2364 E7	3124 A2	3169 D6	3228 D14	3245 B13	3356 A4	5111 A1	6105 A2	7126 B3	7208 D13	
1114 C3	1305 A9	2118 A2	2213 B12	2230 B13	2283 A7	2338 D8	2366 C6	3125 A2	3170 D6	3229 A10	3251 B12	3357 B4	5112 A1	6108 B3	7162 D7	7209 A4	
1116 E6	2102 D3	2119 D2	2214 C12	2231 B13	2284 A8	2339 D9	2367 C6	3126 A1	3205 B12	3231 A10	3274 B13	3358 B4	5113 D4	6235 A10	7163 D6	7210 B12	
1117 D7	2103 B3	2125 B3	2215 C12	2232 B13	2294 B8	2347 A3	2370 B6	3127 A1	3206 B12	3233 A10	3275 A10	3359 A4	5114 D3	6236 A10	7164 D5	7211 A10	

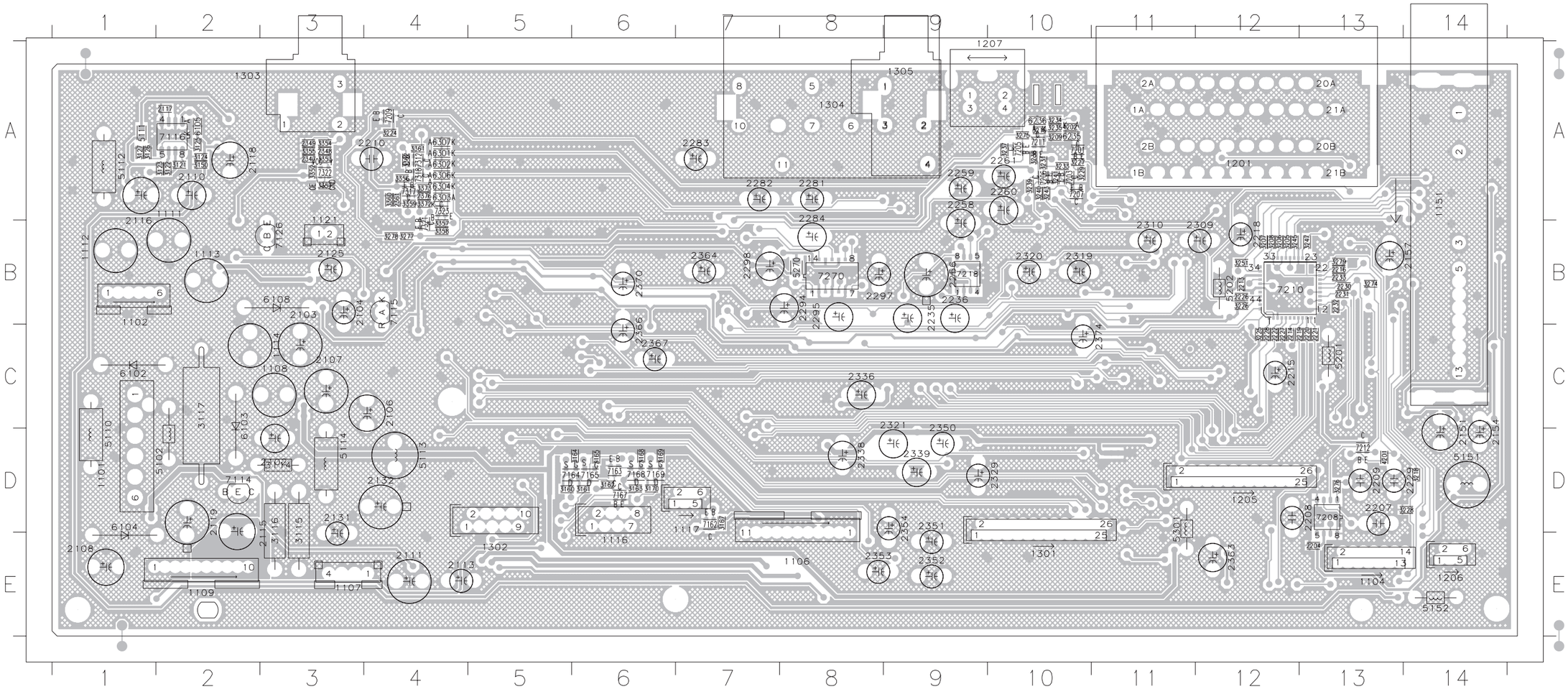

Layout: Analog (Bottom View)

2105 C11	2265 A5	2305 C4	2324 C9	2343 A7	2375 B5	3142 B13	3203 B5	3253 C4	3269 A5	3301 D5	3315 D3	3329 E3	3344 A6	3370 B9	5154 B1	6212 A3	7222 A5	7315 A6
2152 A1	2266 A5	2306 C4	2325 D6	2344 A6	3101 E11	3143 B13	3204 A4	3254 C4	3270 A5	3302 D5	3316 D4	3330 B9	3345 A7	3371 E3	5155 B1	6305 D6	7301 B4	7316 A6
2153 C1	2267 A5	2307 E3	2327 C7	2345 A6	3102 E11	3144 B12	3210 A2	3255 C3	3271 A6	3303 D5	3317 B5	3331 A10	3346 A6	4100 D11	5206 B5	6310 C10	7302 C5	7319 A10
2155 C1	2268 A5	2308 B3	2328 D8	2346 A6	3103 D14	3145 B13	3211 A4	3256 C3	3283 C4	3304 D5	3318 C5	3332 B10	3347 A7	4101 C13	5302 A6	6311 C10	7303 D5	7320 C7
2156 B1	2269 A6	2311 B4	2330 A10	2355 D5	3104 C11	3146 B13	3212 A4	3257 C3	3284 C4	3305 D5	3319 B4	3333 A9	3348 A6	4102 C12	5303 A6	7101 E11	7304 B8	7324 C10
2158 A1	2291 A8	2312 B5	2331 A9	2356 D5	3105 D14	3147 C11	3213 A4	3258 C3	3285 C3	3306 D5	3320 B5	3334 A10	3349 A7	4103 B13	6109 E14	7102 D12	7305 A3	
2201 A4	2292 A8	2313 B5	2332 A10	2357 D5	3108 E11	3151 C1	3214 A4	3260 A6	3286 C3	3307 B4	3321 B5	3335 B10	3350 A6	4104 B13	6110 B12	7103 D11	7306 A4	
2202 A4	2293 A7	2314 C5	2333 B9	2358 D5	3119 B12	3152 C1	3215 A3	3261 A5	3287 C3	3308 C4	3322 B5	3337 C7	3363 B9	4105 B14	6201 A3	7104 C12	7307 B5	
2203 A2	2296 B7	2315 C5	2334 B9	2362 D5	3130 B1	3153 C1	3217 A3	3262 A5	3288 C3	3309 A4	3323 C10	3338 D7	3364 C8	4110 D14	6202 A3	7105 D11	7308 B5	
2205 A4	2299 B8	2316 D4	2335 B10	2365 B9	3131 B1	3154 C11	3219 A3	3264 A5	3290 B7	3310 A4	3324 C10	3339 C7	3365 C8	4111 D14	6203 A2	7110 D12	7309 E3	
2206 A4	2301 B4	2317 B5	2337 C5	2368 B9	3134 E11	3155 D11	3220 A3	3265 A5	3291 A7	3311 B3	3325 C10	3340 D7	3366 C8	4301 E3	6204 A5	7119 D11	7310 E3	
2217 B3	2302 B4	2318 B5	2340 D6	2369 C8	3139 B12	3156 C1	3221 A2	3266 A5	3292 A8	3312 A4	3326 C10	3341 A7	3367 B9	4302 C7	6205 A2	7125 B13	7311 D3	
2257 B6	2303 B4	2322 D6	2341 C7	2371 B9	3140 D12	3201 A4	3222 B2	3267 A5	3293 A7	3313 C5	3327 B9	3342 A6	3368 B9	4303 D7	6206 A3	7151 C1	7313 A7	
2262 A6	2304 C4	2323 C9	2342 D7	2373 B3	3141 B13	3202 B4	3223 B2	3268 A5	3300 D5	3314 E3	3328 E3	3343 A7	3369 B9	5153 A1	6207 A3	7221 A5	7314 A6	

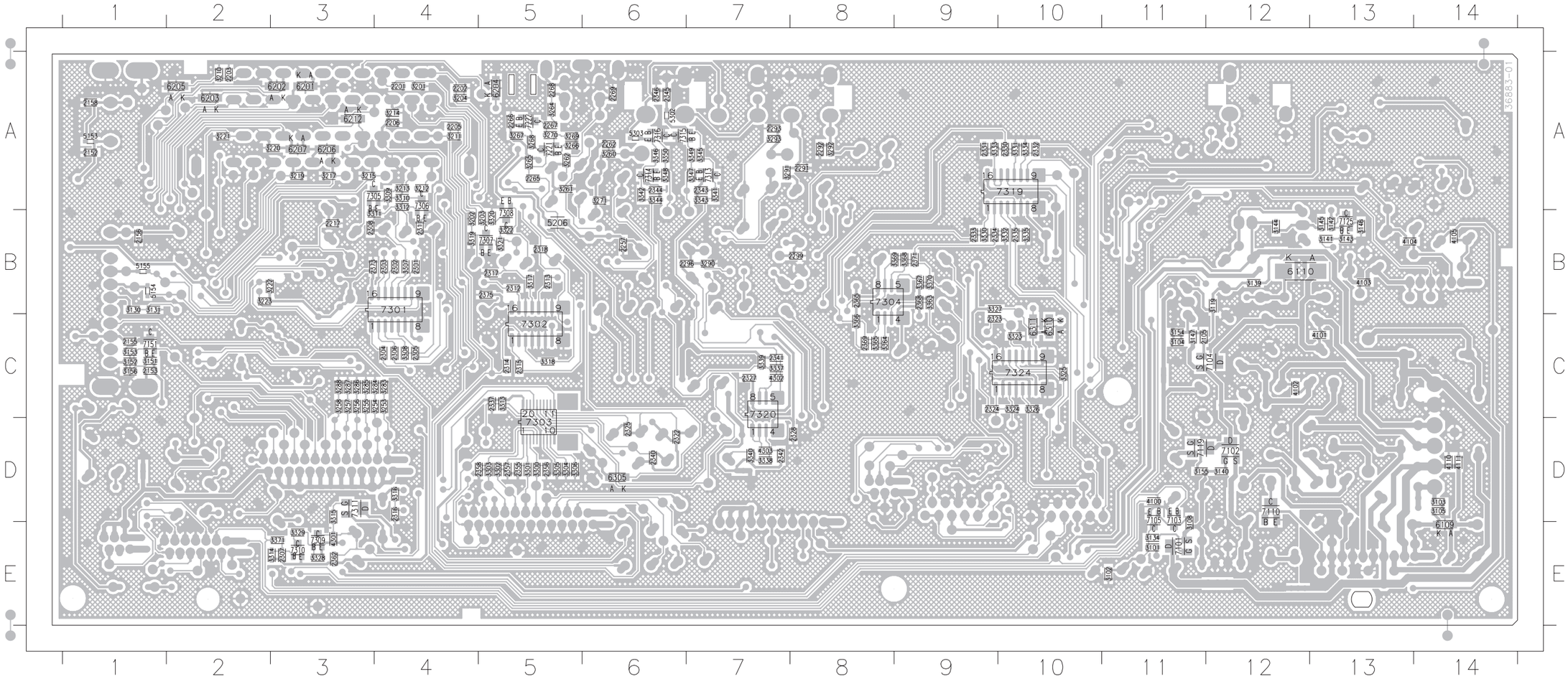

Test Points Overview for Analog Board

F100 C13	F111 D14	F121 A14	F133 E2	F163 B1	F173 E9	F191 B13	F210 E3	F227 A3	F243 D4	F253 D3	F278 A6	F291 A8	F304 E6	F314 B5	F326 A12	F336 D10	F348 C7
F101 D14	F112 E13	F122 B14	F134 E8	F164 B2	F174 D9	F201 A4	F211 A2	F228 A3	F244 D3	F254 D2	F279 A5	F292 A8	F305 D6	F315 A10	F327 A12	F339 A11	F349 A6
F102 D14	F113 E13	F123 B13	F135 E6	F165 B1	F175 D9	F202 A4	F212 A1	F229 A2	F245 D3	F255 D3	F280 A6	F293 B7	F306 D5	F316 B10	F328 D5	F340 D6	F353 D6
F103 D14	F114 E13	F124 B14	F136 E11	F166 B1	F176 D8	F203 A4	F213 A3	F231 A2	F246 D3	F263 E1	F281 C2	F294 A8	F307 D5	F319 A10	F329 A11	F341 E3	
F104 D14	F115 D13	F125 B13	F137 E12	F167 A1	F177 D8	F204 A4	F221 A4	F232 B2	F247 D3	F264 E1	F285 B7	F295 A8	F308 D5	F320 A10	F330 D11	F342 D4	
F105 E11	F116 E13	F126 A13	F138 E12	F168 A1	F178 D9	F205 A3	F222 A4	F233 A2	F248 D3	F271 B6	F286 B7	F296 A7	F309 D5	F321 A7	F331 D10	F343 D4	
F106 C2	F117 E13	F127 C14	F157 E2	F169 A13	F179 D8	F206 A5	F223 A4	F238 C2	F249 D2	F274 A6	F287 B8	F297 A7	F310 D5	F322 A7	F332 D10	F344 C10	
F107 E1	F118 E13	F128 C12	F158 E10	F170 D9	F180 D8	F207 A3	F224 A4	F239 B3	F250 D3	F275 A5	F288 B7	F301 E5	F311 A11	F323 B7	F333 C10	F345 D9	
F109 E2	F119 B12	F130 E7	F161 C1	F171 D9	F181 D9	F208 A3	F225 A4	F241 D3	F251 D3	F276 A5	F289 B7	F302 D6	F312 E5	F324 B6	F334 E10	F346 B10	
F110 E14	F120 B13	F132 E7	F162 B1	F172 D9	F190 B12	F209 A1	F226 A3	F242 D4	F252 D3	F277 A6	F290 A7	F303 D6	F313 E4	F325 A6	F335 E10	F347 D7	

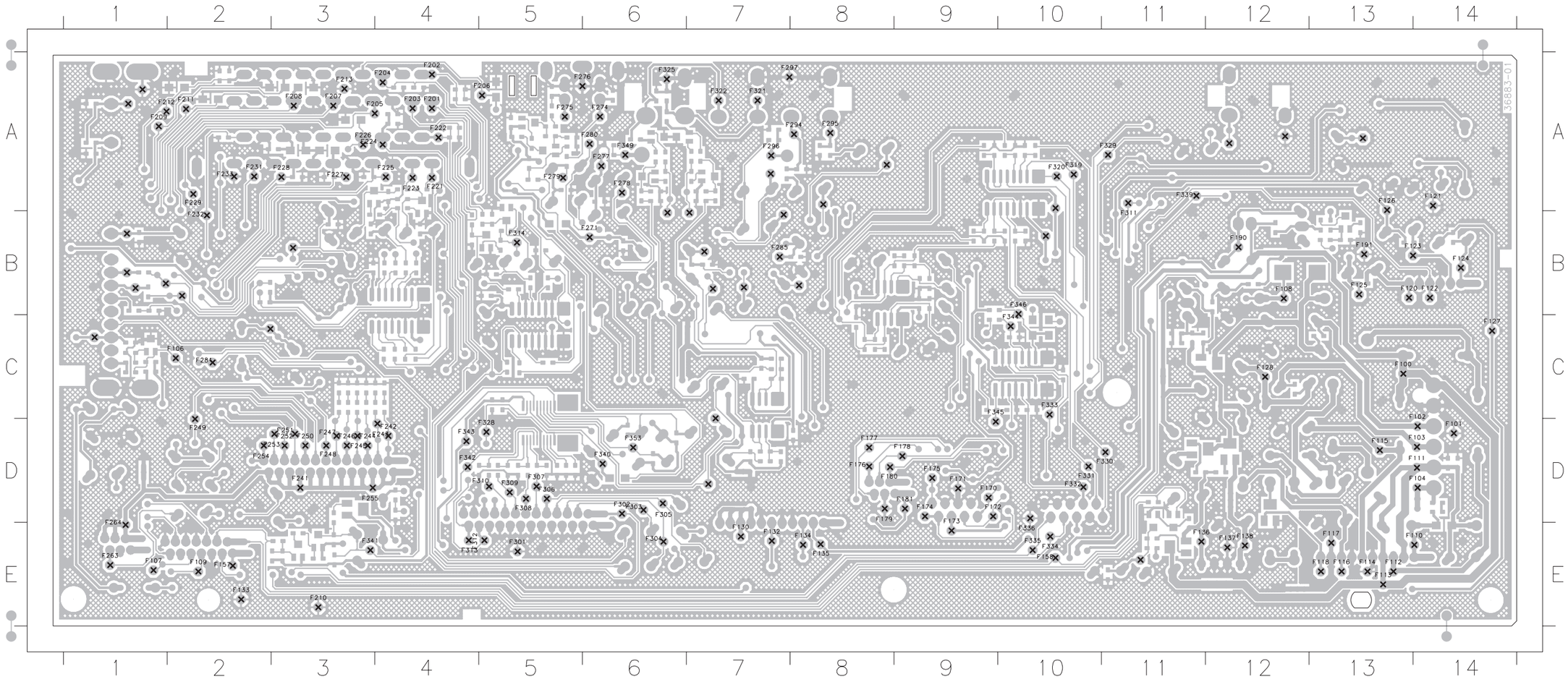

Waveforms of Analog Board

178 VCR_CLK

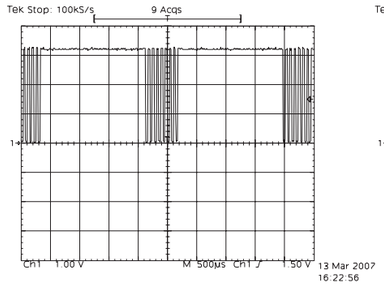

F106 CVB_TV (tuner output)

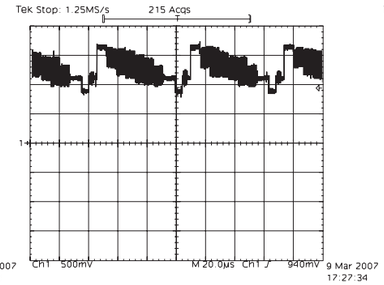

F177 VCR_CSN

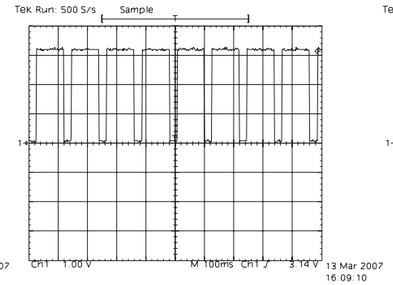

F180 VCR_DA_IN

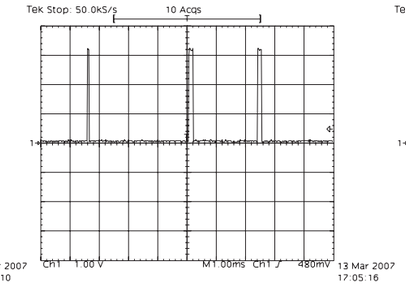

F181 VCR_DA_OUT

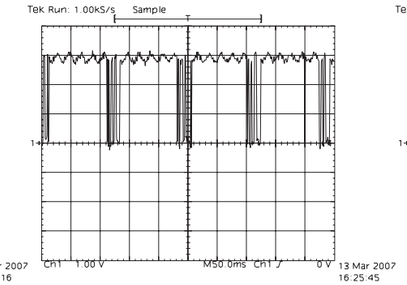

F201 AOUT1R SCART

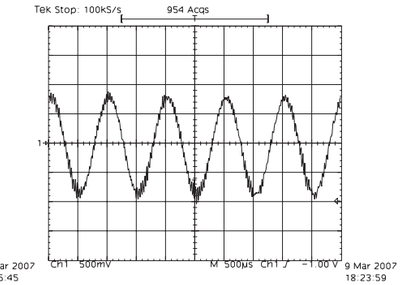

F203 AOUT1L SCART

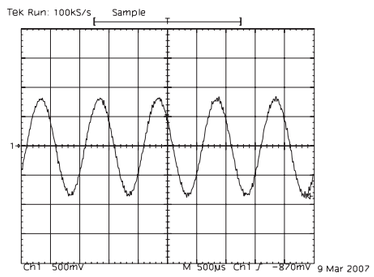

F205 BOUT SCART

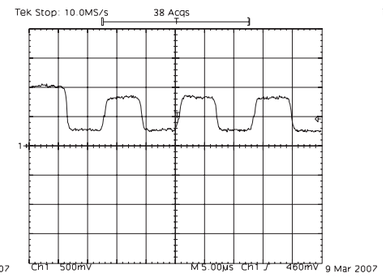

F207 GOUT SCART

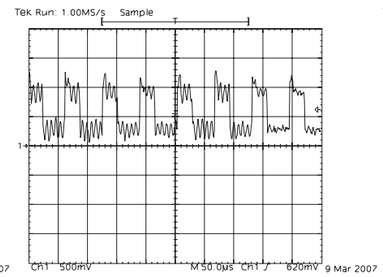

F208 ROUT SCART

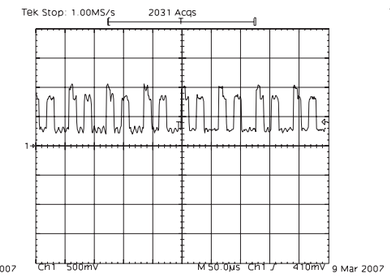

F211 YCVBSOUT1 SCART

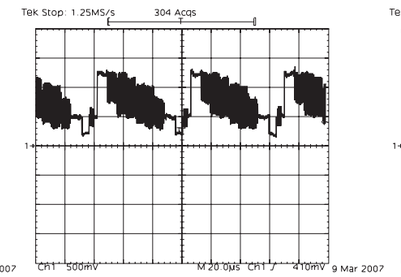

F274 Y (S-VIDEO)

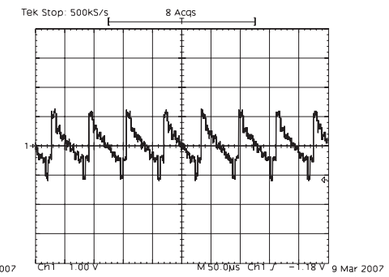

F275 C (S-VIDEO)

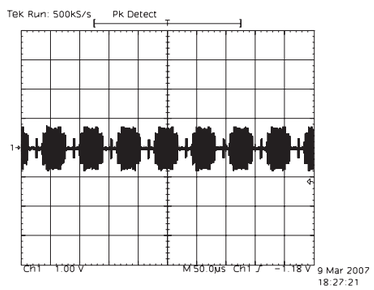

F277 CVBS_CINCH_OUT

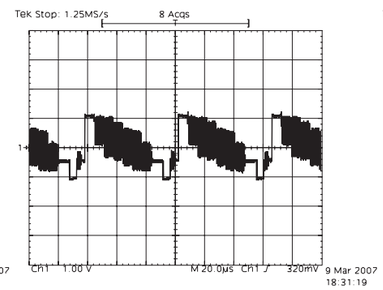

F294 Pr

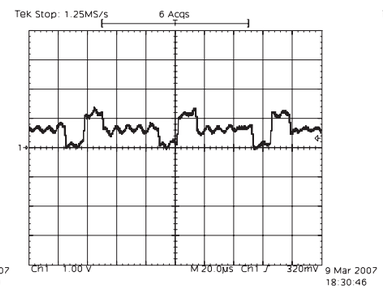

F295 Pb

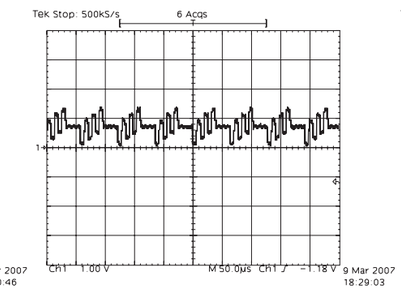

F296 Component Y

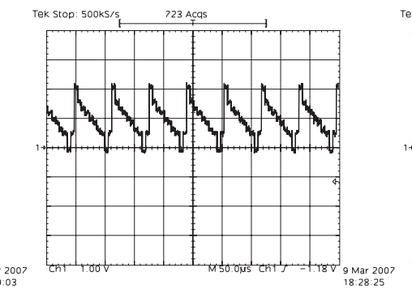

F321 Aud L

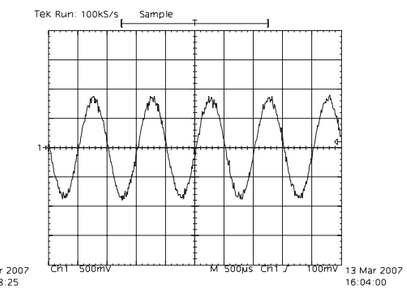

F322 Aud R

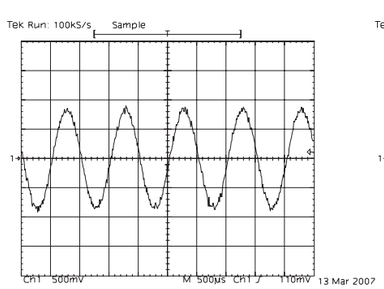

F327 Digital Out

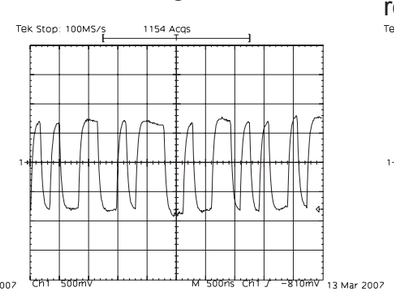

F334 VCR_VID_ IN only when recording from tuner to VCR

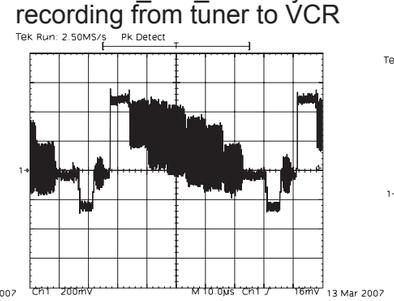

F335 VCR_VID_OUT only when VCR (full bar) is recorded to DVDRW

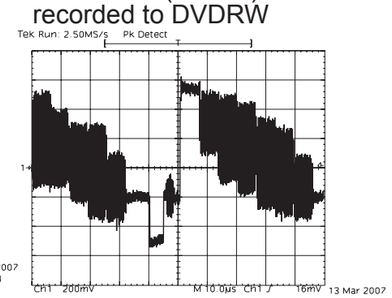

Layout: Digital (Top View)

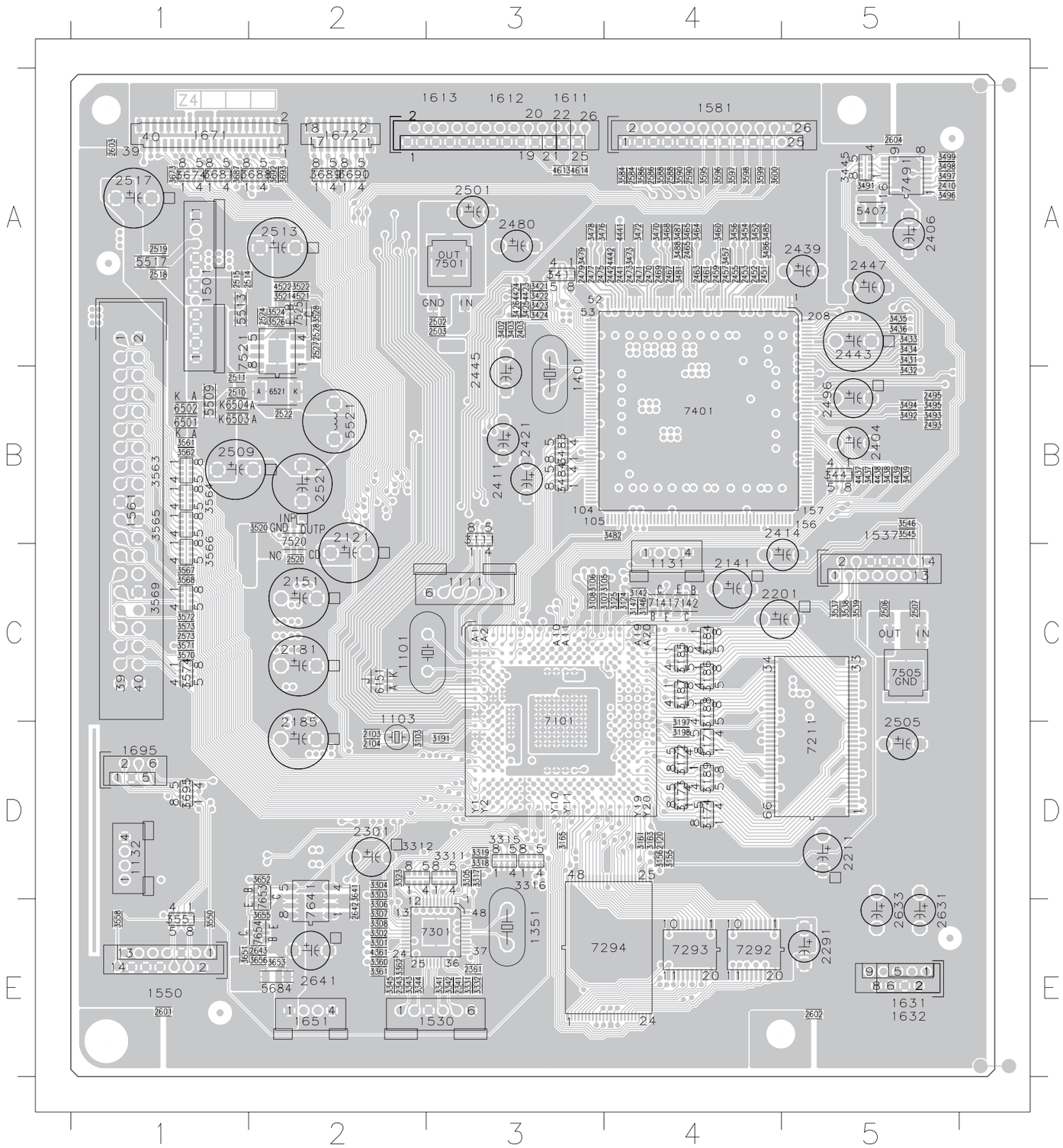

1101	C2	2520	C2	3433	A5	3681	A1
1103	C2	2521	B2	3434	A5	3687	A1
1111	C3	2522	B2	3435	A5	3688	A2
1131	C4	2524	A2	3436	A5	3689	A2
1132	D1	2527	A2	3437	B5	3690	A2
1351	E3	2528	A2	3438	B5	3692	A2
1401	B3	2573	C1	3439	B5	3693	A2
1501	A1	2584	A4	3441	B5	3695	D1
1530	E3	2586	A4	3445	A5	4361	E2
1537	B5	2588	A4	3452	A4	4423	A3
1550	E1	2590	A4	3454	A4	4424	A3
1561	B1	2601	E1	3456	A4	4437	B5
1581	A4	2602	E5	3457	A4	4438	B5
1611	A3	2603	A1	3460	A4	4439	B5
1612	A3	2604	A5	3464	A4	4441	A4
1613	A3	2631	E5	3465	A4	4442	A4
1631	E5	2633	E5	3468	A4	4521	A2
1632	E5	2641	E2	3470	A4	4522	A2
1651	E2	2642	E2	3472	A4	4613	A3
1671	A1	2643	E2	3473	A4	4614	A3
1672	A2	3103	D2	3476	A3	5407	A5
1695	D1	3105	C4	3478	A3	5509	B1
2103	D2	3106	C3	3479	A3	5513	A1
2104	D2	3107	C4	3481	A4	5517	A1
2120	D4	3108	C3	3482	B4	5521	B2
2121	B2	3111	B3	3483	B3	5684	E2
2141	C4	3124	C4	3484	B3	6151	C2
2151	C2	3125	C4	3485	A4	6501	B1
2181	C2	3142	C4	3486	A4	6502	B1
2185	D2	3146	C4	3487	A4	6503	B1
2201	C4	3147	C4	3488	A4	6504	B1
2211	D5	3155	D4	3491	A5	6521	B2
2291	E5	3156	D4	3492	B5	7101	C3
2301	D2	3161	D4	3493	B5	7141	C4
2341	E3	3163	D4	3494	B5	7142	C4
2343	E2	3165	D3	3495	B5	7211	D5
2361	E3	3171	D4	3496	A5	7292	E4
2403	A3	3172	D4	3497	A5	7293	E4
2404	B5	3173	D4	3498	A5	7294	E4
2406	A5	3174	D4	3499	A5	7301	E3
2410	A5	3184	C4	3520	B2	7401	B4
2411	B3	3185	C4	3521	A2	7491	A5
2414	B5	3186	C4	3522	A2	7501	A3
2421	B3	3187	C4	3524	A2	7505	C5
2439	A5	3188	C4	3526	A2	7520	B2
2441	A4	3189	D4	3528	A2	7521	A1
2442	A4	3191	D3	3537	C5	7525	A2
2443	A5	3197	D4	3538	C5	7641	E2
2445	B3	3198	D4	3539	C5	7653	D2
2447	A5	3301	E2	3545	B5	7654	E2
2451	A4	3302	E2	3546	B5		
2452	A4	3303	D2	3550	E1		
2453	A4	3304	D2	3551	E1		
2455	A4	3305	D3	3558	E1		
2457	A4	3306	E2	3561	B1		
2459	A4	3307	E2	3562	B1		
2461	A4	3308	E2	3563	B1		
2463	A4	3311	D3	3564	B1		
2465	A4	3312	D2	3565	B1		
2467	A4	3315	D3	3566	C1		
2469	A4	3316	D3	3567	C1		
2470	A4	3317	D3	3568	C1		
2471	A4	3318	D3	3569	C1		
2473	A4	3319	D3	3570	C1		
2475	A3	3323	D2	3571	C1		
2477	A3	3331	E3	3572	C1		
2479	A3	3332	E3	3573	C1		
2480	A3	3341	E3	3574	C1		
2493	B5	3342	E3	3584	A4		
2495	B5	3343	E2	3586	A4		
2496	B5	3344	E2	3588	A4		
2501	A3	3345	E2	3590	A4		
2502	A3	3360	E2	3595	A4		
2503	A3	3361	E2	3596	A4		
2505	D5	3362	E2	3597	A4		
2506	C5	3402	A3	3598	A4		
2507	C5	3403	A3	3599	A4		
2509	B1	3411	A3	3600	A4		
2510	B1	3421	A3	3641	D2		
2511	B1	3422	A3	3651	E1		
2513	A2	3423	A3	3652	D2		
2514	A1	3424	A3	3653	E2		
2515	A1	3425	A3	3655	E2		
2517	A1	3426	A3	3656	E2		
2518	A1	3431	A5	3673	A1		
2519	A1	3432	B5	3674	A1		

Layout: Digital (Bottom View)

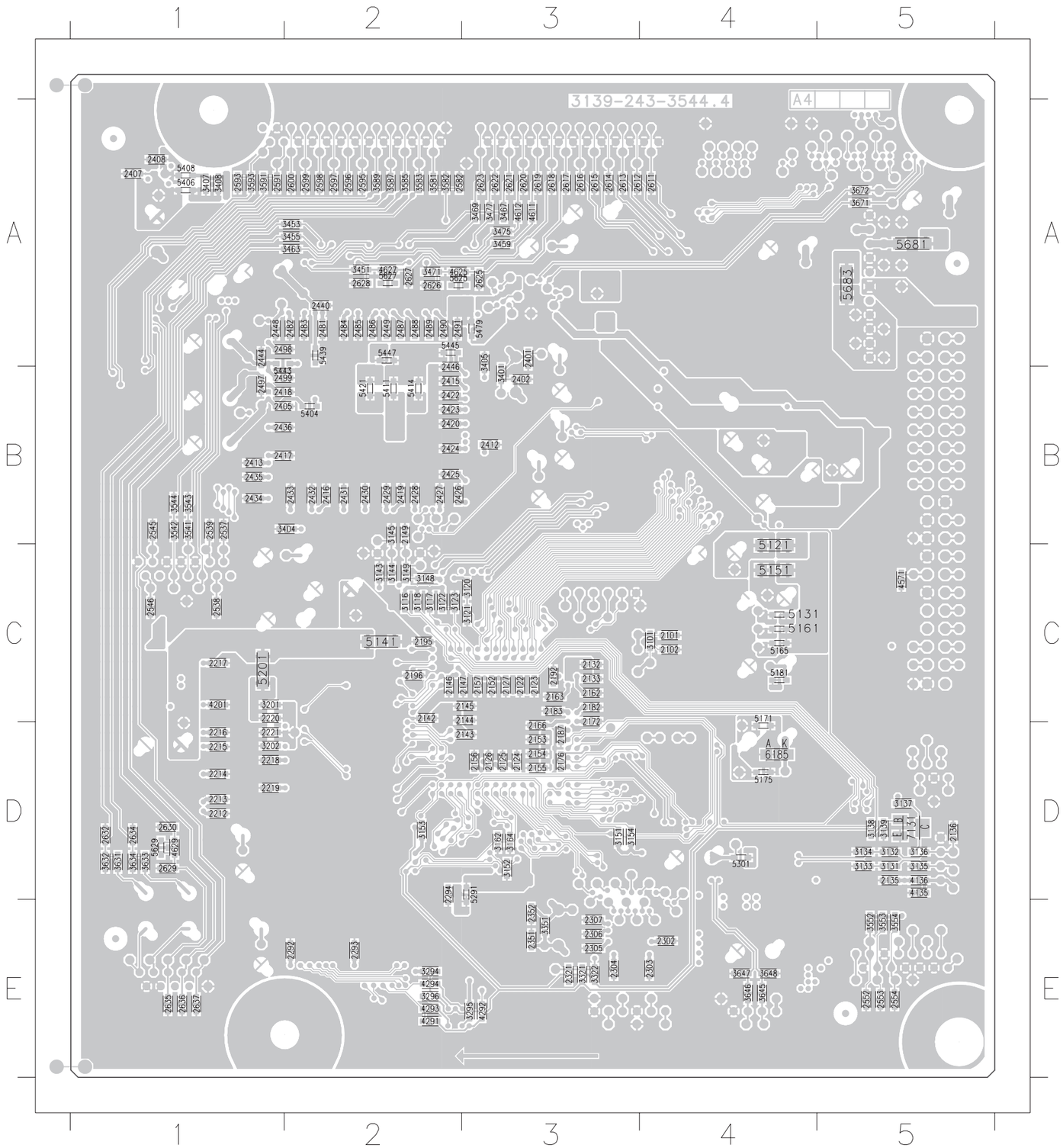

2101	C4	2440	A2	3162	D3	5625	A2
2102	C4	2444	A1	3164	D3	5627	A2
2122	C3	2446	B2	3201	C1	5629	D1
2123	C3	2448	A1	3202	D1	5681	A5
2124	D3	2449	A2	3294	E2	5683	A5
2125	D3	2481	A2	3295	E3	6185	D4
2126	D3	2482	A2	3296	E2	7131	D5
2127	C3	2483	A2	3321	E3		
2132	C3	2484	A2	3322	E3		
2133	C3	2485	A2	3351	E3		
2135	D5	2486	A2	3401	B3		
2136	D5	2487	A2	3404	B2		
2142	C2	2488	A2	3405	A3		
2143	D3	2489	A2	3407	A1		
2144	C3	2490	A2	3408	A1		
2145	C3	2491	A2	3451	A2		
2146	C2	2497	B1	3453	A2		
2147	C3	2498	A1	3455	A2		
2149	B2	2499	B1	3459	A3		
2152	C3	2537	B1	3463	A2		
2153	D3	2538	C1	3467	A3		
2154	D3	2539	B1	3469	A3		
2155	D3	2545	B1	3471	A2		
2156	D3	2546	C1	3475	A3		
2157	C3	2552	E5	3477	A3		
2162	C3	2553	E5	3541	B1		
2163	C3	2554	E5	3542	B1		
2166	D3	2582	A2	3543	B1		
2172	C3	2591	A1	3544	B1		
2176	D3	2593	A1	3552	E5		
2182	C3	2595	A2	3553	E5		
2183	C3	2596	A2	3554	E5		
2187	D3	2597	A2	3581	A2		
2192	C3	2598	A2	3582	A2		
2195	C2	2599	A2	3583	A2		
2196	C2	2600	A2	3585	A2		
2212	D1	2611	A4	3587	A2		
2213	D1	2612	A3	3589	A2		
2214	D1	2613	A3	3591	A1		
2215	D1	2614	A3	3593	A1		
2216	D1	2615	A3	3631	D1		
2217	C1	2616	A3	3632	D1		
2218	D1	2617	A3	3633	D1		
2219	D1	2618	A3	3634	D1		
2220	C1	2619	A3	3645	E4		
2221	D1	2620	A3	3646	E4		
2292	E2	2621	A3	3647	E4		
2293	E2	2622	A3	3648	E4		
2294	D2	2623	A3	3671	A5		
2302	E4	2625	A3	3672	A5		
2303	E4	2626	A2	4135	D5		
2304	E3	2627	A2	4136	D5		
2305	E3	2628	A2	4201	C1		
2306	E3	2629	D1	4291	E2		
2307	E3	2630	D1	4292	E3		
2321	E3	2632	D1	4293	E2		
2351	E3	2634	D1	4294	E2		
2352	E3	2635	E1	4571	C5		
2401	A3	2636	E1	4611	A3		
2402	B3	2637	E1	4612	A3		
2405	B1	3101	C4	4625	A2		
2407	A1	3116	C2	4627	A2		
2408	A1	3117	C2	4629	D1		
2412	B3	3118	C2	5121	C4		
2413	B1	3120	C3	5131	C4		
2415	B2	3121	C3	5141	C2		
2416	B2	3122	C2	5151	C4		
2417	B1	3123	C2	5161	C4		
2418	B1	3131	D5	5165	C4		
2419	B2	3132	D5	5171	C4		
2420	B2	3133	D5	5175	D4		
2422	B2	3134	D5	5181	C4		
2423	B2	3135	D5	5201	C1		
2424	B2	3136	D5	5291	D3		
2425	B2	3137	D5	5301	D4		
2426	B2	3138	D5	5404	B2		
2427	B2	3139	D5	5406	A1		
2428	B2	3143	C2	5408	A1		
2429	B2	3144	C2	5411	B2		
2430	B2	3145	B2	5414	B2		
2431	B2	3148	C2	5421	B2		
2432	B2	3149	C2	5439	A2		
2433	B2	3151	D3	5443	B1		
2434	B1	3152	D3	5445	A2		
2435	B1	3153	D2	5447	A2		
2436	B1	3154	D3	5479	A3		

Test Points Overview for Digital Board

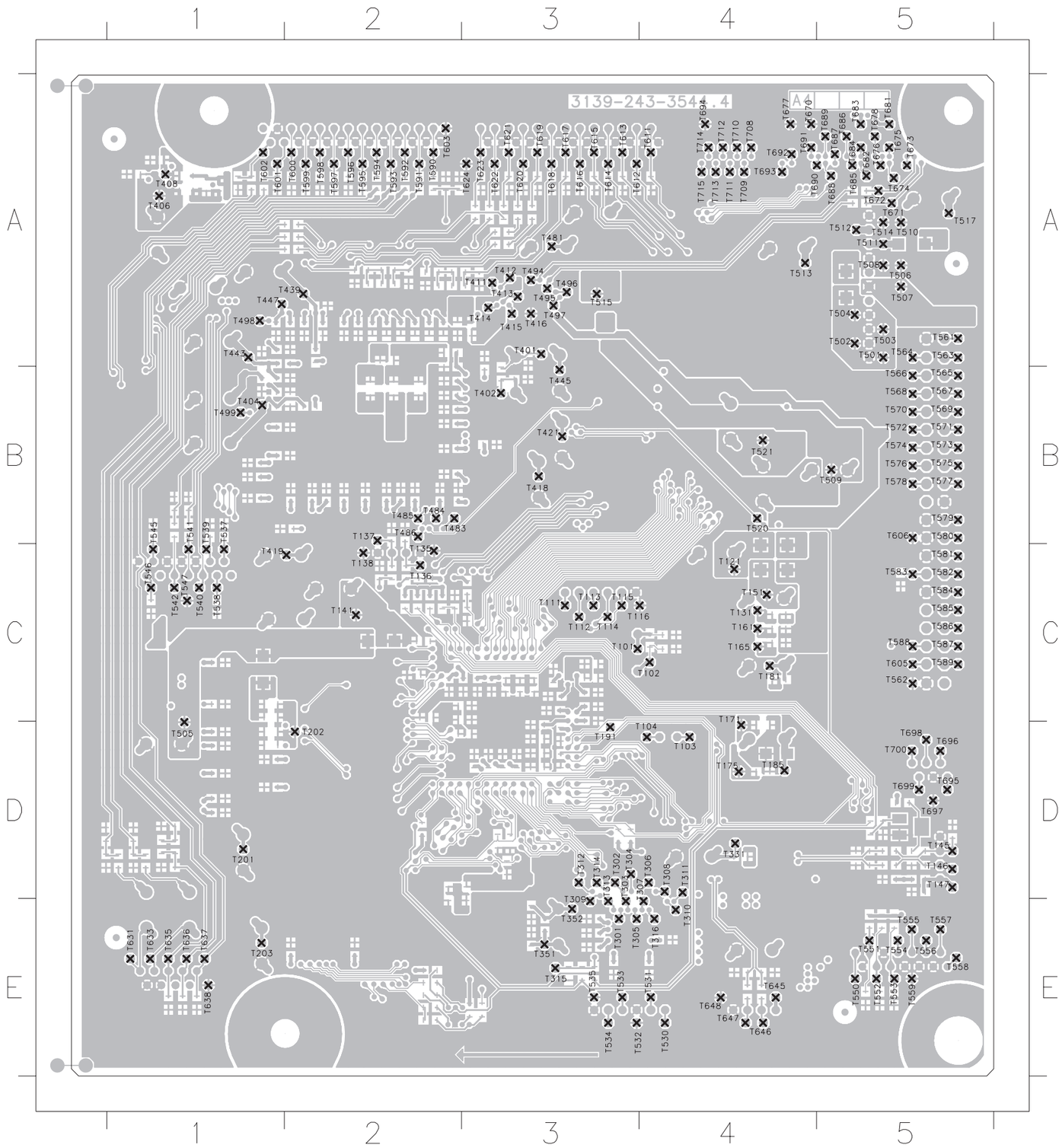

T101	C3	T313	D3	T508	A5	T568	B5	T616	A3	T696	D5
T101	C3	T313	E3	T508	A5	T568	B5	T616	A3	T696	D5
T102	C4	T314	D3	T509	B5	T569	B5	T617	A3	T697	D5
T102	C4	T314	D3	T509	B5	T569	B5	T617	A3	T697	D5
T103	D4	T315	E3	T510	A5	T570	B5	T618	A3	T698	D5
T103	D4	T315	E3	T510	A5	T570	B5	T618	A3	T698	D5
T104	D4	T316	E4	T511	A5	T571	B5	T619	A3	T699	D5
T104	D4	T316	E4	T511	A5	T571	B5	T619	A3	T699	D5
T111	C3	T331	D4	T512	A5	T572	B5	T620	A3	T700	D5
T111	C3	T331	D4	T512	A5	T572	B5	T620	A3	T700	D5
T112	C3	T351	E3	T513	A4	T573	B5	T621	A3	T708	A4
T112	C3	T351	E3	T513	A4	T573	B5	T621	A3	T708	A4
T113	C3	T352	E3	T514	A5	T574	B5	T622	A3	T709	A4
T113	C3	T352	E3	T514	A5	T574	B5	T622	A3	T709	A4
T114	C3	T401	A3	T515	A3	T575	B5	T623	A3	T710	A4
T114	C3	T401	A3	T515	A3	T575	B5	T623	A3	T710	A4
T115	C3	T402	B3	T517	A5	T576	B5	T624	A3	T711	A4
T115	C3	T402	B3	T517	A5	T576	B5	T624	A3	T711	A4
T116	C3	T404	B1	T520	B4	T577	B5	T631	E1	T712	A4
T116	C4	T404	B1	T520	B4	T577	B5	T631	E1	T712	A4
T121	C4	T406	A1	T521	B4	T578	B5	T633	E1	T713	A4
T121	C4	T406	A1	T521	B4	T578	B5	T633	E1	T713	A4
T131	C4	T408	A1	T530	E4	T579	B5	T635	E1	T714	A4
T131	C4	T408	A1	T530	E4	T579	B5	T635	E1	T714	A4
T135	C2	T411	A3	T531	E4	T580	B5	T636	E1	T715	A4
T135	C2	T411	A3	T531	E4	T580	B5	T636	E1	T715	A4
T136	C2	T412	A3	T532	E3	T581	C5	T637	E1		
T136	C2	T412	A3	T532	E3	T581	C5	T637	E1		
T137	B2	T413	A3	T533	E3	T582	C5	T638	E1		
T137	B2	T413	A3	T533	E3	T582	C5	T638	E1		
T138	C2	T414	A3	T534	E3	T583	C5	T645	E4		
T138	C2	T414	A3	T534	E3	T583	C5	T645	E4		
T141	C2	T415	A3	T535	E3	T584	C5	T646	E4		
T141	C2	T415	A3	T535	E3	T584	C5	T646	E4		
T145	D5	T416	A3	T537	B1	T585	C5	T647	E4		
T145	D5	T416	A3	T537	C1	T585	C5	T647	E4		
T146	D5	T418	B3	T538	C1	T586	C5	T648	E4		
T146	D5	T418	B3	T538	C1	T586	C5	T648	E4		
T147	D5	T419	C1	T539	B1	T587	C5	T670	A4		
T147	D5	T419	C2	T539	C1	T587	C5	T670	A4		
T151	C4	T421	B3	T540	C1	T588	C5	T671	A5		
T151	C4	T421	B3	T540	C1	T588	C5	T671	A5		
T161	C4	T439	A2	T541	B1	T589	C5	T672	A5		
T161	C4	T439	A2	T541	C1	T589	C5	T672	A5		
T165	C4	T443	A1	T542	C1	T590	A2	T673	A5		
T165	C4	T443	A1	T542	C1	T590	A2	T673	A5		
T171	C4	T445	B3	T545	B1	T591	A2	T674	A5		
T171	D4	T445	B3	T545	C1	T591	A2	T674	A5		
T175	D4	T447	A1	T546	C1	T592	A2	T675	A5		
T175	D4	T447	A1	T546	C1	T592	A2	T675	A5		
T181	C4	T481	A3	T547	C1	T593	A2	T676	A5		
T181	C4	T481	A3	T547	C1	T593	A2	T676	A5		
T185	D4	T483	B2	T550	E5	T594	A2	T677	A4		
T185	D4	T483	B2	T550	E5	T594	A2	T677	A4		
T191	D3	T484	B2	T551	E5	T595	A2	T678	A5		
T191	D3	T484	B2	T551	E5	T595	A2	T678	A5		
T201	D1	T485	B2	T552	E5	T596	A2	T681	A5		
T201	D1	T485	B2	T552	E5	T596	A2	T681	A5		
T202	D2	T486	B2	T553	E5	T597	A2	T682	A5		
T202	D2	T486	B2	T553	E5	T597	A2	T682	A5		
T203	E1	T494	A3	T554	E5	T598	A2	T683	A5		
T203	E1	T494	A3	T554	E5	T598	A2	T683	A5		
T301	E3	T495	A3	T555	E5	T599	A2	T684	A5		
T301	E3	T495	A3	T555	E5	T599	A2	T684	A5		
T302	D3	T496	A3	T556	E5	T600	A2	T685	A5		
T302	D3	T496	A3	T556	E5	T600	A2	T685	A5		
T303	D3	T497	A3	T557	E5	T601	A1	T686	A5		
T303	E3	T497	A3	T557	E5	T601	A1	T686	A5		
T304	D3	T498	A1	T558	E5	T602	A1	T687	A5		
T304	D3	T498	A1	T558	E5	T602	A1	T687	A5		
T305	E3	T499	B1	T559	E5	T603	A2	T688	A5		
T305	E3	T499	B1	T559	E5	T603	A2	T688	A5		
T306	D4	T501	A5	T561	A5	T605	C5	T689	A5		
T306	D4	T501	A5	T561	A5	T605	C5	T689	A5		
T307	D4	T502	A5	T562	C5	T606	B5	T690	A4		
T307	E4	T502	A5	T562	C5	T606	B5	T690	A5		
T308	D4	T503	A5	T563	A5	T611	A4	T691	A4		
T308	D4	T503	A5	T563	A5	T611	A4	T691	A4		
T309	E3	T504	A5	T564	A5	T612	A3	T692	A4		
T309	E3	T504	A5	T564	A5	T612	A3	T692	A4		
T310	E4	T505	D1	T565	B5	T613	A3	T693	A4		
T310	E4	T505	D1	T565	B5	T613	A3	T693	A4		
T311	D4	T506	A5	T566	B5	T614	A3	T694	A4		
T311	D4	T506	A5	T566	B5	T614	A3	T694	A4		
T312	D3	T507	A5	T567	B5	T615	A3	T695	D5		
T312	D3	T507	A5	T567	B5	T615	A3	T695	D5		

Waveforms of Digital Board

T101 SYSTEM CLKI

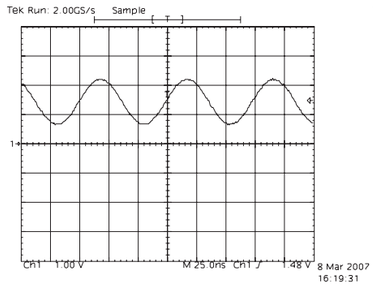

T102 SYSTEM CLKX

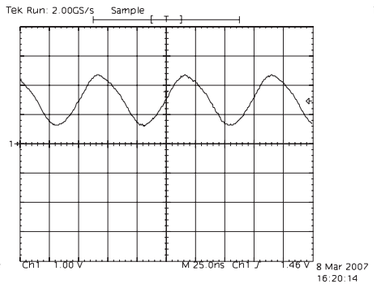

T103 SYSTEM RTC CLKI

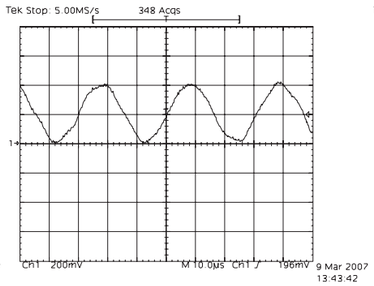

T104 SYSTEM RTC CLKX

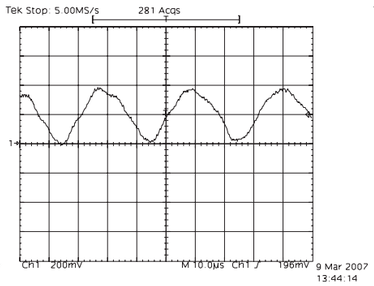

T351 IEEE1394 XCVR XI

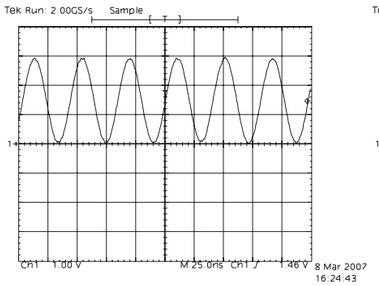

T352 IEEE1394 XCVR XO

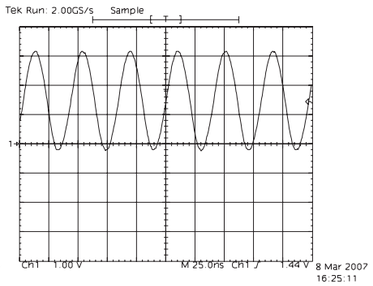

T401 Multi-std AV Decoder XTALI

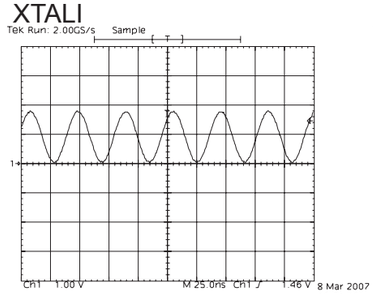

T402 Mutli-std AV Decoder XTALO

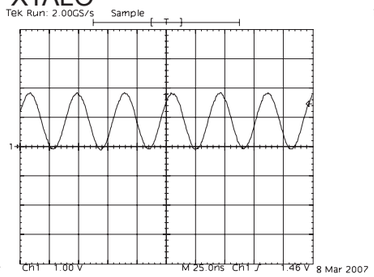

T595 AOD_WCK

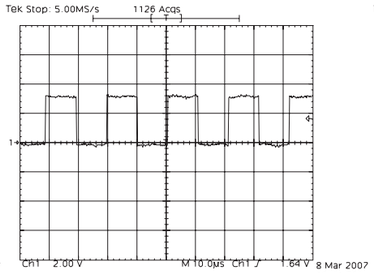

T596 AOD_BCK

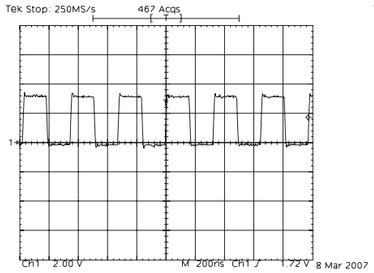

T597 AOD_D(3)

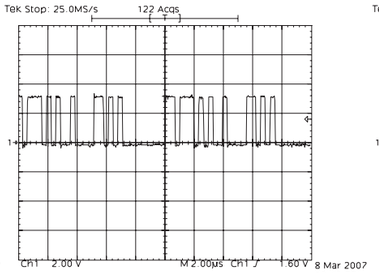

T598 AOD_MCK

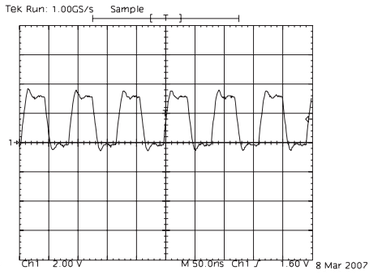

T599 SPDIF_OUT

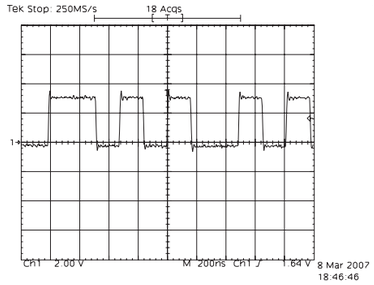

T601.602 A_OUT_R.A_OUT_L

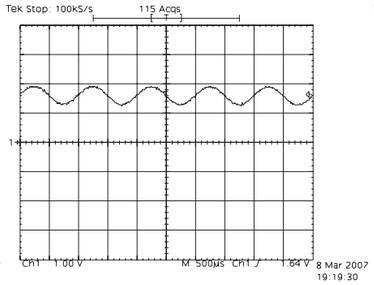

T611A_Pb

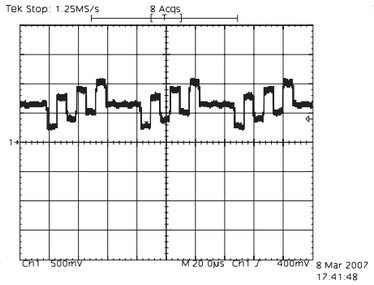

T611B_B

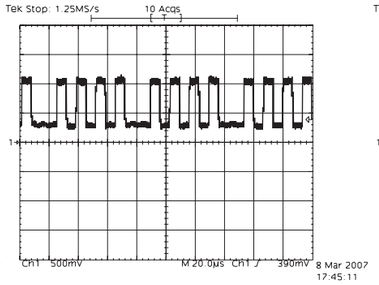

T612A_Component Y

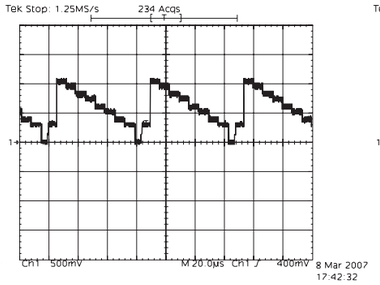

T612B_G

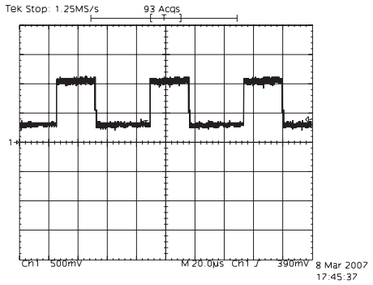

T613A_Pr

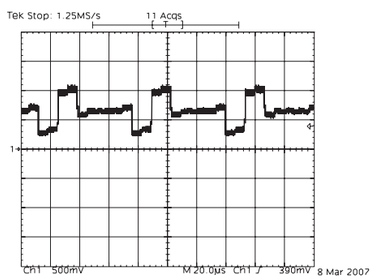

T613B_R

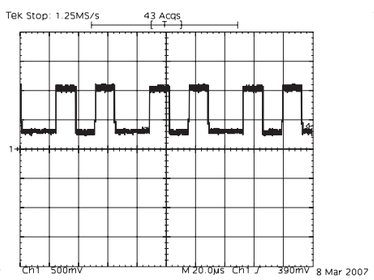

T614_SY

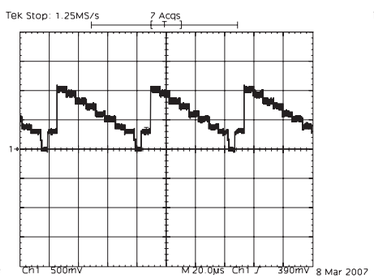

T615_SC

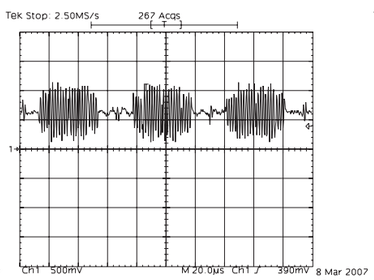

T616_CVBS

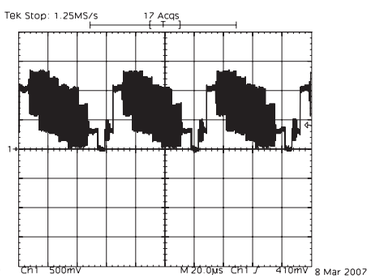

Layout: Front AV Board (Top View)

1101 A3
1102 A3
1103 A3
1104 A2
1105 A1
1106 A1
1107 A4

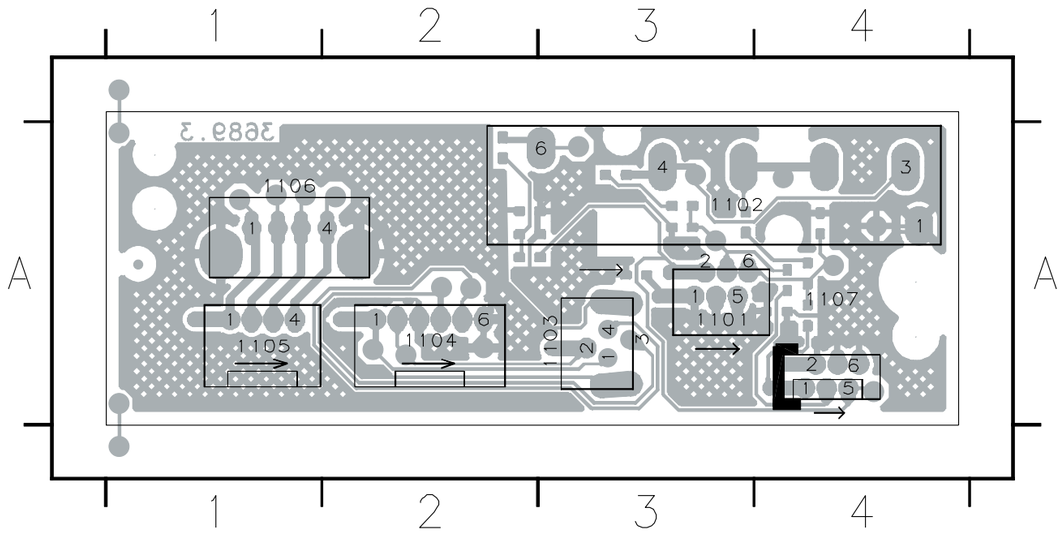

Layout: Front AV Board (Bottom View)

2131 A3
2200 A1
2203 A2
3200 A1
3202 A2
3203 A3
4201 A2
4202 A1
4203 A3
4204 A3
4205 A1
4206 A1
4298 A1
4299 A2
5201 A2
5202 A2
5203 A3

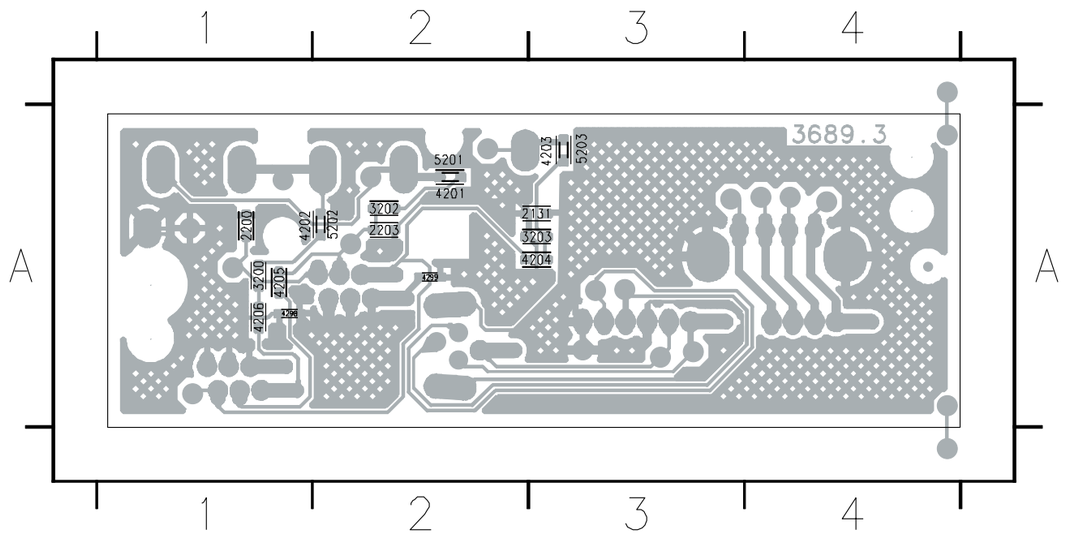

Layout: Front Board (Top View)

1002 C12
1003 A18
1004 C21
1005 B21
1006 C17
1007 B18
1008 C19
1009 C5
1010 C3
1011 B20
1012 A1
1013 C6
1014 A17
1015 C8
2004 A4
2006 C1
2017 A3
2023 C2
2024 B2
6001 B13
6002 B13
6003 B12
6004 B12
6005 B12
6006 B12
6007 B13
6008 B13
6009 B13
6010 B14
6014 B18
6019 B9
6020 C9
7000 B2
7003 B1
7004 B15
9001 A3
9002 B4
9003 B4
9004 B5
9005 C5
9006 B7
9007 B7
9008 B7
9009 B7
9010 B8
9011 B8
9012 B8
9013 B8
9014 C7
9015 C7
9016 B9
9017 B8
9018 C9
9019 B10
9020 B10
9021 B10
9022 B11
9023 B11
9024 B11
9025 B11
9026 B11
9027 B13
9028 C13
9029 B14
9030 B15
9031 C8
9032 B17
9033 B18
9034 B18
9035 B18
9036 B19
9037 B19
9038 C20
9039 B20
9040 B21
9041 C22

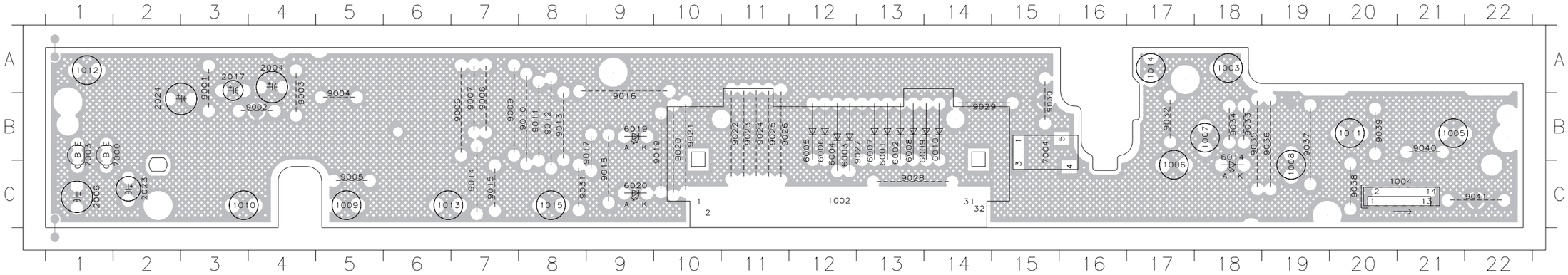

Layout: Front Board (Bottom View)

2001 C2
2002 C2
2003 C3
2005 C3
2009 C22
2010 B18
2011 B21
2012 B22
2016 B20
2018 B20
2019 B21
2020 B22
2021 B8
2022 B8
2025 B8
2031 C2
2032 C1
2033 C2
2036 B16
2037 B18
2038 A18
2051 C20
2052 B2
2053 A22
3000 C5
3001 B16
3002 B5
3003 B16
3004 C5
3005 B20
3006 B20
3007 B20
3008 C20
3009 C20
3010 C20
3011 C2
3012 C3
3014 B21
3015 C20
3016 B20
3017 B21
3018 B22
3019 C20
3023 B21
3024 B22
3025 B21
3026 B21
3027 C14
3028 C14
3029 C8
3030 B8
3032 B21
3033 A21
3035 B15
3042 C10
3043 C10
3044 C10
3045 C10
3046 C10
3047 C9
3049 A21
3050 A21
3051 C20
3053 A22
4001 B19
4003 C14
4004 B13
4005 B11
4006 B9
4007 C10
4008 C9
4009 C4
4010 B2
4011 B2
4012 C1
4013 C3
4014 A20
5001 B22
5002 C2
5003 C2
6011 B11
6012 B11
6013 A21
6015 B19
6018 B18
6021 C15
6022 C18
6023 C17
6024 C17
6031 B6
6032 A5
6033 B2
6034 B4
6035 C6
6036 C4
6037 C5
6041 B21
6052 B2
7001 B22
7002 B21
7005 B21
7006 C5
7031 B17
7041 A21

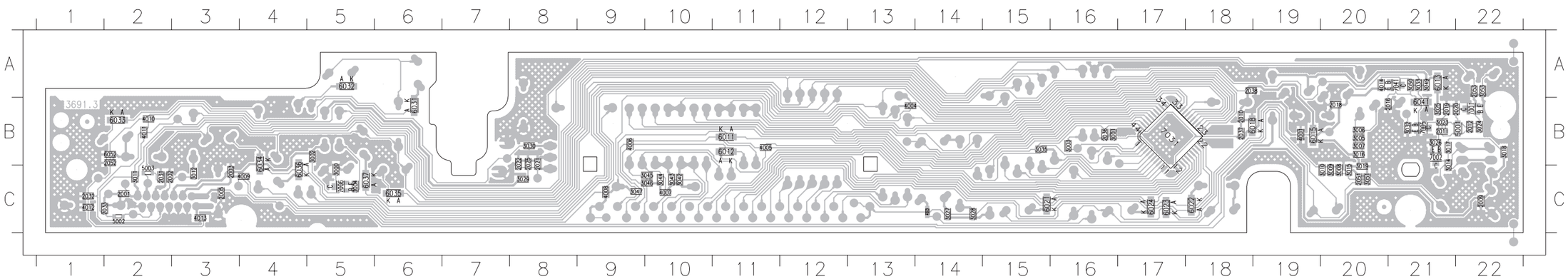

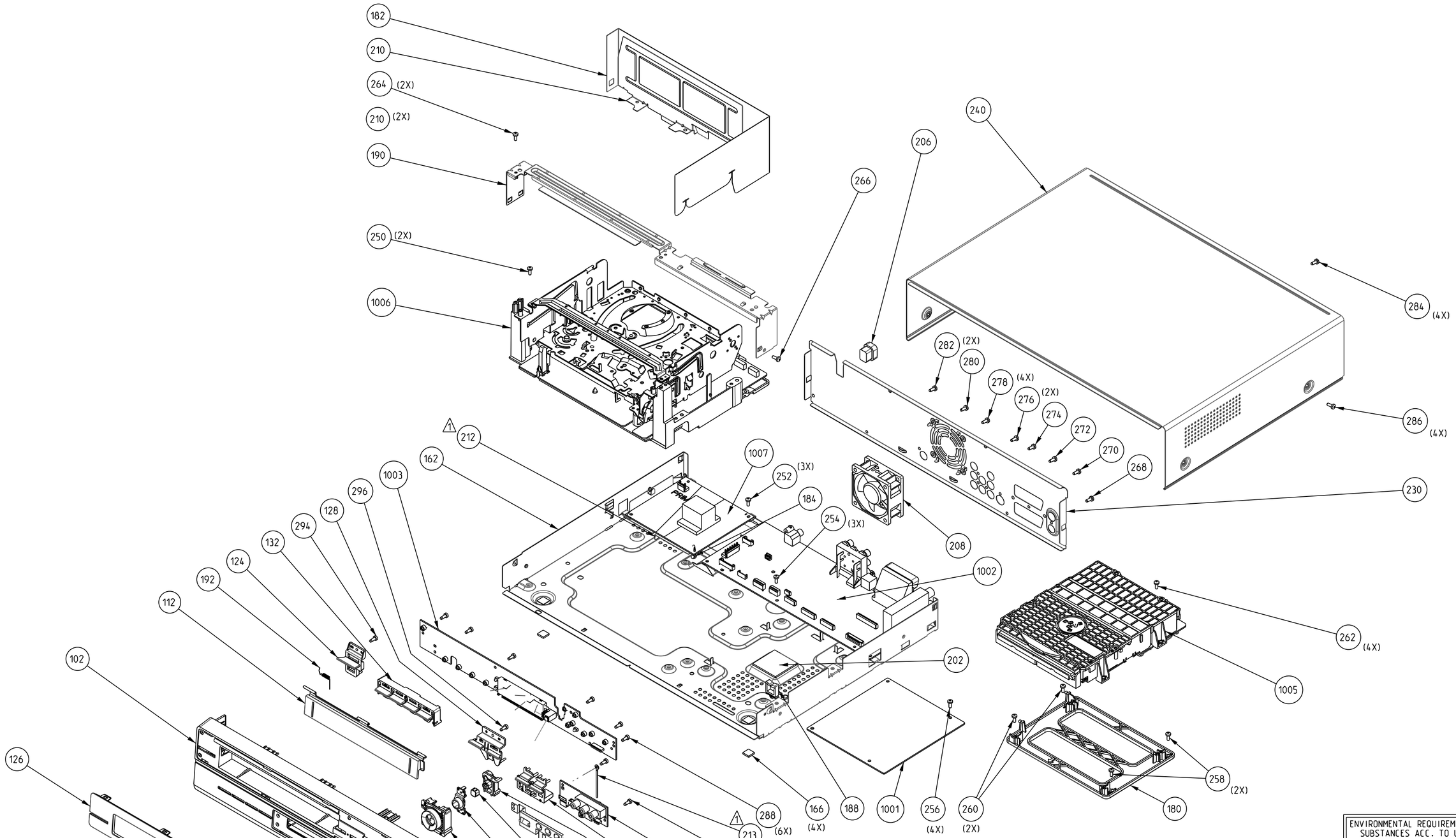

ENVIRONMENTAL REQUIREMENT: NO BANNED SUBSTANCES ACC. TO UAT-0480/100

CN: -----	Set Name: DVDR3510V		
UN-D 104.1 .. Ra in um .	TOLERANCES UNLESS OTHERWISE STATED DIMENSIONS ±0.2 ANGLE ±0.5	ITEM	ASSEMBLY NO. / QUANT.
GENERAL ROUGHNESS 0.8 / UNIT mm	MATERIAL ----- ----- ----- -----		PATTERN NO.
SCALE 1:1 / PROJ THIRD ANGLE	TREATMENT ----- ----- ----- -----		ORDER NO. / QUANT.
CLASS NO. 2XX000	ENCASING DVDR3510V/31		3139 249 4152
....-..-.. 2006-10-12 ....-..-..			1 2007-02-01 / 1 2007-01-12
NAME YEO ST	SUPERS xxxx xxx xxxx	1 / 10	110 - 1 / A2
SV / CHECK	DATE 2006-10-12	© KONINKLIJKE PHILIPS ELECTRONICS N.V. 2006	

ALL RIGHTS ARE RESERVED. REPRODUCTION IN WHOLE OR PART IS PROHIBITED WITHOUT THE WRITTEN CONSENT OF THE COPYRIGHT OWNER.

PHILIPS

SERVICE PARTS LIST

DVDR3510V/05/31/51/58

0110	313924416241		COVER TRAY DVDR3510V	
0182	313924320502		SHIELD THERMAL VCR DVDR3430V	
0206	313911426671		BUSH 450H259010	
0208	282203100039		FAN 12VDC 0.8W 3100RPM B	
0212	313924320931	$	INSULATOR SHEET DVDR3510V	
0230	313924126501		PLATE BACK DVDR3510V	
0240	313924124441		COVER TOP DVDR3430V	
0342	242254901516		REMOTE CONTR DVDR3510V EU V+ B	/05
0342	242254901517		REMOTE CONTR DVDR3510V EU SV B	/31/51/58
0345	242207098236	$	MAINSCORD UK 5A 1M8 VH BK B	/05
0345	242207098231	$	MAINSCORD IEC 2A5 1M8 VH BK B	/31/51/58
0486	242207600885		CBLE IEC-M 1M47 IEC-F BK B	
0196	313924126482		SHIELD EMC AV DVDR3510V	
0901	314302766612		FRONT ASSY DVDR3510V/05	/05
0901	314302766592		FRONT ASSY DVDR3510V/31	/31/51/58
1003	313924851981		PCBAS FRONT DVDR3510V	
1004	313924851991		PCBAS FRONT AV DVDR3510V	
8007	313924101191		FFC FOIL 06P/280/06P AD 1MMP	
8008	313924101941		FFC FOIL 14P/120/14P BD 1MMP	
8015	313911027871		CBLE PH 06P/120/06P PH 26ST BK	
8016	313911027741		CBLE PH 04P/120/04P PH 26ST BK	
8017	313924103101		FFC FOIL 06P/120/06P BD 1MMP	
0920	314302764722		FRAME ASSY DVDR3430V	
1001	313924852001		PCBAS DVDR3510V DIGITAL EU	
1002	313924851971		PCBAS ANA DVDR3510V EU	
1005	313924800401		DRIVE D6.1 CLOSED	
1006	242254901124		VHS DRIVE MODULE HK100ED B	
1007	313924712872	$	PSU 06V85 AC8100 LF PIE	
8001	310415702191		CBLE PH 10P/340/10P PH 26ST BK	
8002	313911102651		FFC FOIL 10P/100/10P AD	
8003	313911034841		FFC FOIL 08P/100/08P AD	
8004	310330891051		CWAS 06PH/06PH 100 6P BK 265	
8006	310360100472		CBLE HR 4P/180/4P LC UL	
8009	313924102471		FFC FOIL 06P/180/06P AD 1MMP	
8010	313924103611		FFC FOIL 14P/120/14P AD 1MMP	
8011	313924103691		FFC FOIL 26P/100 AD 1MMP FOLD	
8012	313924103431		FFC FOIL 26P/120/26P AD 1MMP	
8013	313911028181		CBLE PH 11P/120/11P PH 26ST BK	
8014	313924102162		CBLE IDE 40P/220/40P IDE UL SP	

Manual Procedure to remove the tape from the loader

Immediate action must be done to remove the Video Cassette on the set manually as described below :

Note : Item number refers to the Deck Parts List in VCR Module
(12NC:2422 549 01124) unless otherwise stated

1. Turn the B525 (LDG Belt MK11) in the direction indicated by the arrow below in figure 1:

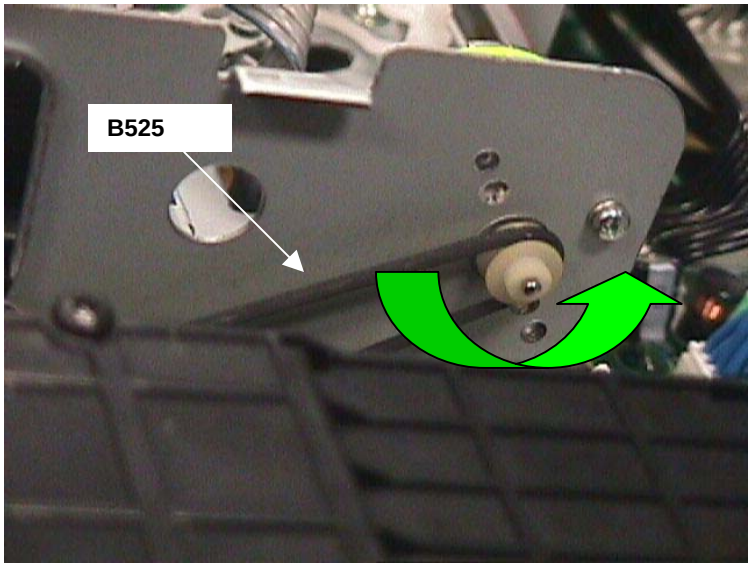

Figure 1:Turning B525 by hand

2. Upon hearing the click sound , the Clip[B587] holding the VCR will be released as shown in figure 2.

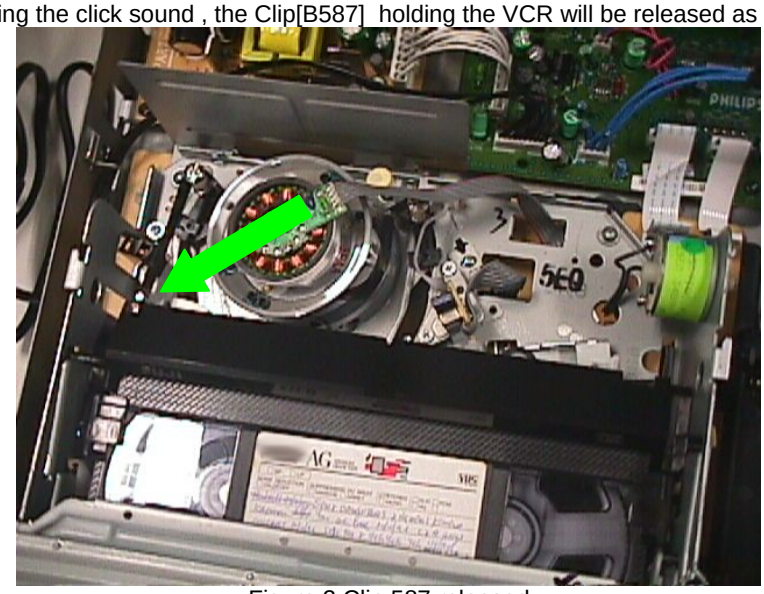

Figure 2:Clip 587 released

3.The tape will be slackened as shown in figure 3.

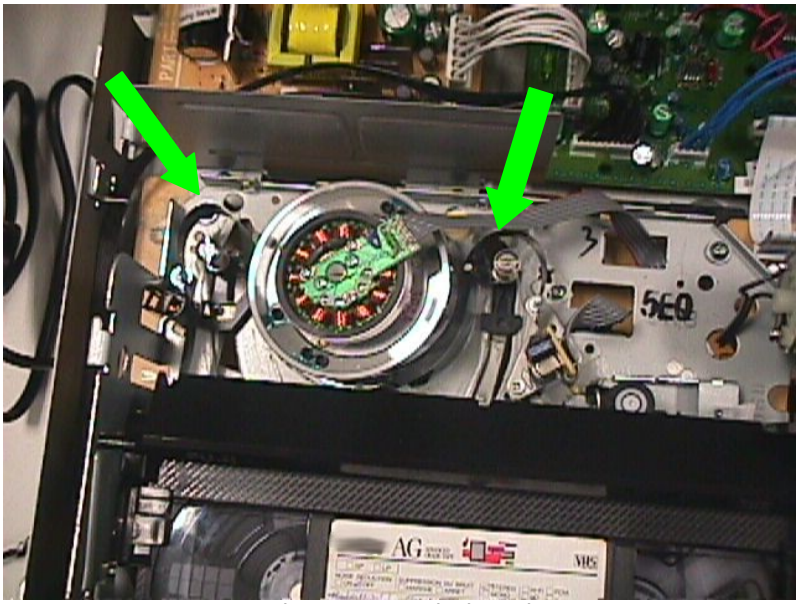

Figure 3:Tape slackened

4.The video casette slowly reversed and raised to loading position in figure 4 .

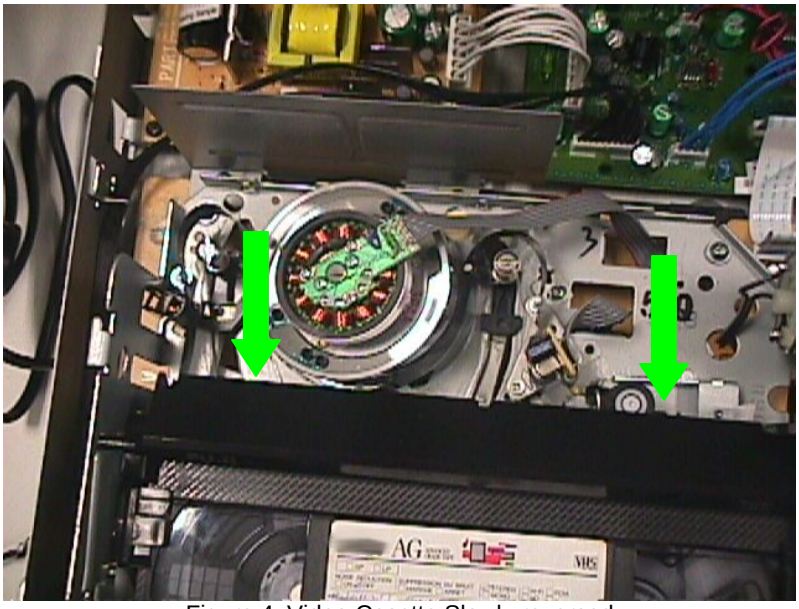

Figure 4 :Video Casette Slowly reversed

5. Fold the slack of the video by hand to minimize damage by the front dust cover of Videocasette.The front cover upon approaching the B354 & B355 position will be closed and comes out of the Door Flap(112 of exploded view of DVDR3430V)

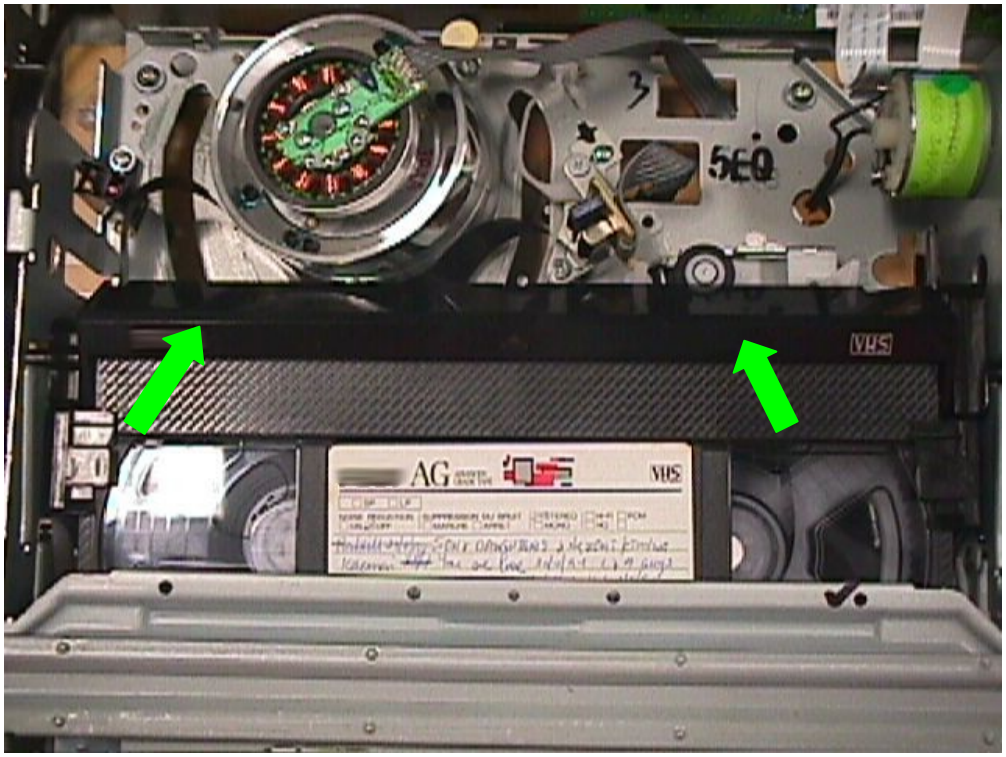

Figure 5:The dust cover slowy cover the tape due to spring action of the dust cover

6.Remove the cassette as you normally does from the front loading position .

VCR Module

HK100ED

2422 549 01124

Service
Service
Service

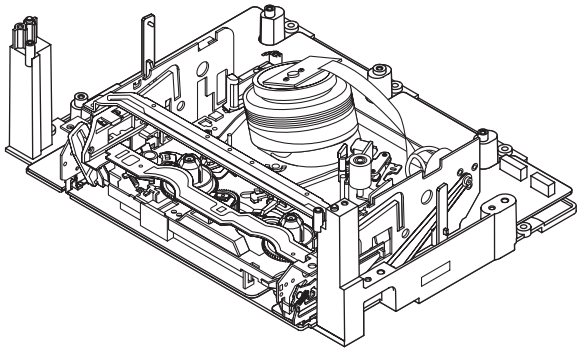

Service Manual

VHS

Contents

Chapter

Sec. 1: Schematic Diagrams and CBA's
Exploded Views
Mechanical and Electrical Parts Lists

Sec. 2: Standard Maintenance
Mechanism Alignment Procedures
Disassembly / Assembly of Mechanism
Deck Exploded Views
Deck Parts List

©Copyright 2006 Philips Consumer Electronics B.V. Eindhoven, The Netherlands.
All rights reserved. No part of this publication may be reproduced, stored in a retrieval system or transmitted, in any form or by any means, electronic, mechanical, photocopying, or otherwise without the prior permission of Philips.

Published by FU-KC 0623 Service AV Systems Printed in Netherlands Subjection to modification EN 3139 785 32220

Version 1.0

PHILIPS

MAIN SECTION

VCR Module

Sec. 1: Main Section

- **Schematic Diagrams and CBA's**
- **Exploded Views**
- **Mechanical and Electrical Parts List**

TABLE OF CONTENTS

STANDARD NOTES FOR SERVICING 1-1-1
SIGNAL NAME ABBREVIATIONS 1-2-1
ELECTRICAL ADJUSTMENT INSTRUCTIONS 1-3-1
BLOCK DIAGRAMS 1-4-1
SCHEMATIC DIAGRAMS / CBA'S AND TEST POINTS 1-5-1
WAVEFORMS 1-6-1
WIRING DIAGRAM 1-7-1
IC PIN FUNCTION DESCRIPTIONS 1-8-1
LEAD IDENTIFICATIONS 1-9-1
ELECTRICAL PARTS LIST 1-10-1
EXPLODED VIEWS 1-11-1
MECHANICAL PARTS LIST 1-12-1

STANDARD NOTES FOR SERVICING

Circuit Board Indications

1. The output pin of the 3 pin Regulator ICs is indicated as shown.

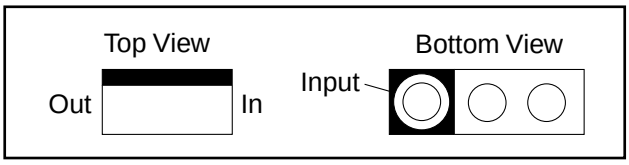

2. For other ICs, pin 1 and every fifth pin are indicated as shown.

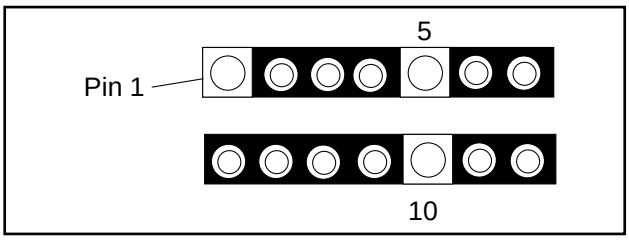

3. The 1st pin of every male connector is indicated as shown.

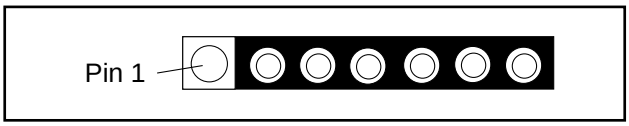

Pb (Lead) Free Solder

When soldering, be sure to use the Pb free solder.

Information about lead-free soldering

Philips CE is producing lead-free sets from 1.1.2005 onwards.

IDENTIFICATION

Regardless of special logo (not always indicated)

One must treat all sets from 1 Jan 2005 onwards, according to the next rule:
Serial Number gives a 9-digit. Digit 2&3 shows the WEEK, and digit 4 shows the YEAR.

So from 015 onwards=from 1 Jan 2005 onwards

Important note: *In fact also products of year 2004 must be treated in this way as long as you avoid mixing solder-alloys (leaded/ lead-free). So best to always use SAC305 and the higher temperatures belong to this.*

Due to lead-free technology some rules have to be respected by the workshop during a repair:

- Use only lead-free solder alloy Philips SAC305 with order code 0622 149 00106. If lead-free solder-paste is required, please contact the manufacturer of your solder-equipment. In general use of solder-paste within workshops should be avoided because paste is not easy to store and to handle.
- Use only adequate solder tools applicable for lead-free solder alloy. The solder tool must be able
  - To reach at least a solder-temperature of 400°C,
  - To stabilize the adjusted temperature at the solder-tip
  - To exchange solder-tips for different applications.
- Adjust your solder tool so that a temperature around 360°C - 380°C is reached and stabilized at the solder joint. Heating-time of the solder-joint should not exceed ~ 4 sec. Avoid temperatures above 400°C otherwise wear-out of tips will rise drastically and flux-fluid will be destroyed. To avoid wear-out of tips switch off un-used equipment, or reduce heat.
- Mix of lead-free solder alloy / parts with leaded solder alloy / parts is possible but PHILIPS recommends strongly to avoid mixed solder alloy types (leaded and lead-free).
  If one cannot avoid or does not know whether product is lead-free, clean carefully the solder-joint from old solder alloy and re-solder with new solder alloy (SAC305).
- Use only original spare-parts listed in the Service-Manuals. Not listed standard-material (commodities) has to be purchased at external companies.

- Special information for BGA-ICs:
  - always use the 12nc-recognizable soldering temperature profile of the specific BGA (for de-soldering always use the lead-free temperature profile, in case of doubt)
  - lead free BGA-ICs will be delivered in so-called 'dry-packaging' (sealed pack including a silica gel pack) to protect the IC against moisture. After opening, dependent of MSL-level seen on indicator-label in the bag, the BGA-IC possibly still has to be baked dry. (MSL=Moisture Sensitivity Level). This will be communicated via AYS-website.
  Do not re-use BGAs at all.
- For sets produced before 1.1.2005 (except products of 2004), containing leaded solder-alloy and components, all needed spare-parts will be available till the end of the service-period. For repair of such sets nothing changes.
- On our website **www.atyourservice.ce.Philips.com** you find more information to:
  - BGA-de-/soldering (+ baking instructions)
  - Heating-profiles of BGAs and other ICs used in Philips-sets

You will find this and more technical information within the “magazine”, chapter “workshop news”.

For additional questions please contact your local repair-helpdesk.

How to Remove / Install Flat Pack-IC

1. Removal

With Hot-Air Flat Pack-IC Desoldering Machine:

1. Prepare the hot-air flat pack-IC desoldering machine, then apply hot air to the Flat Pack-IC (about 5 to 6 seconds). (Fig. S-1-1)

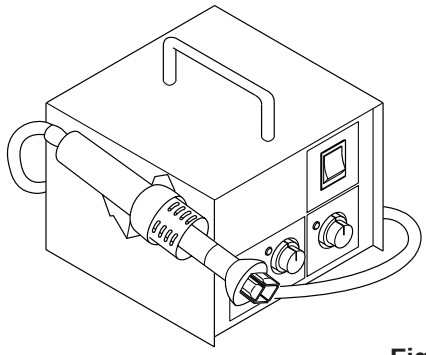

Fig. S-1-1

2. Remove the flat pack-IC with tweezers while applying the hot air.
3. Bottom of the flat pack-IC is fixed with glue to the CBA; when removing entire flat pack-IC, first apply soldering iron to center of the flat pack-IC and heat up. Then remove (glue will be melted). (Fig. S-1-6)
4. Release the flat pack-IC from the CBA using tweezers. (Fig. S-1-6)

CAUTION:

1. The Flat Pack-IC shape may differ by models. Use an appropriate hot-air flat pack-IC desoldering machine, whose shape matches that of the Flat Pack-IC.
2. Do not supply hot air to the chip parts around the flat pack-IC for over 6 seconds because damage to the chip parts may occur. Put masking tape around the flat pack-IC to protect other parts from damage. (Fig. S-1-2)

3. The flat pack-IC on the CBA is affixed with glue, so be careful not to break or damage the foil of each pin or the solder lands under the IC when removing it.

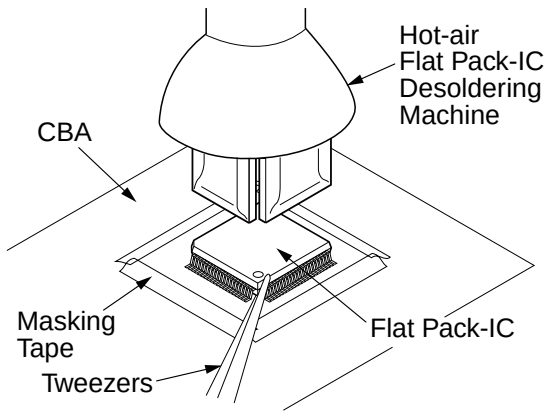

Fig. S-1-2

With Soldering Iron:

1. Using desoldering braid, remove the solder from all pins of the flat pack-IC. When you use solder flux which is applied to all pins of the flat pack-IC, you can remove it easily. (Fig. S-1-3)

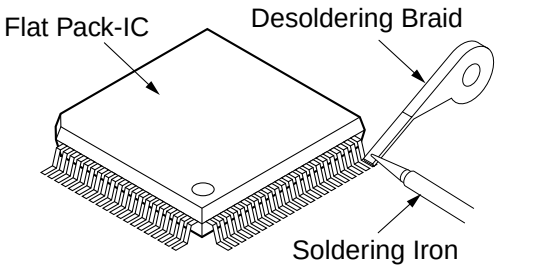

Fig. S-1-3

2. Lift each lead of the flat pack-IC upward one by one, using a sharp pin or wire to which solder will not adhere (iron wire). When heating the pins, use a fine tip soldering iron or a hot air desoldering machine. (Fig. S-1-4)

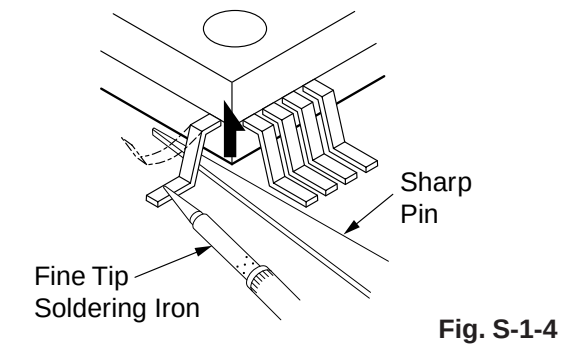

Fig. S-1-4

3. Bottom of the flat pack-IC is fixed with glue to the CBA; when removing entire flat pack-IC, first apply soldering iron to center of the flat pack-IC and heat up. Then remove (glue will be melted). (Fig. S-1-6)
4. Release the flat pack-IC from the CBA using tweezers. (Fig. S-1-6)

With Iron Wire:

1. Using desoldering braid, remove the solder from all pins of the flat pack-IC. When you use solder flux which is applied to all pins of the flat pack-IC, you can remove it easily. (Fig. S-1-3)
2. Affix the wire to a workbench or solid mounting point, as shown in Fig. S-1-5.
3. While heating the pins using a fine tip soldering iron or hot air blower, pull up the wire as the solder melts so as to lift the IC leads from the CBA contact pads as shown in Fig. S-1-5.
4. Bottom of the flat pack-IC is fixed with glue to the CBA; when removing entire flat pack-IC, first apply soldering iron to center of the flat pack-IC and heat up. Then remove (glue will be melted). (Fig. S-1-6)
5. Release the flat pack-IC from the CBA using tweezers. (Fig. S-1-6)

Note: When using a soldering iron, care must be taken to ensure that the flat pack-IC is not being held by glue. When the flat pack-IC is removed from the CBA, handle it gently because it may be damaged if force is applied.

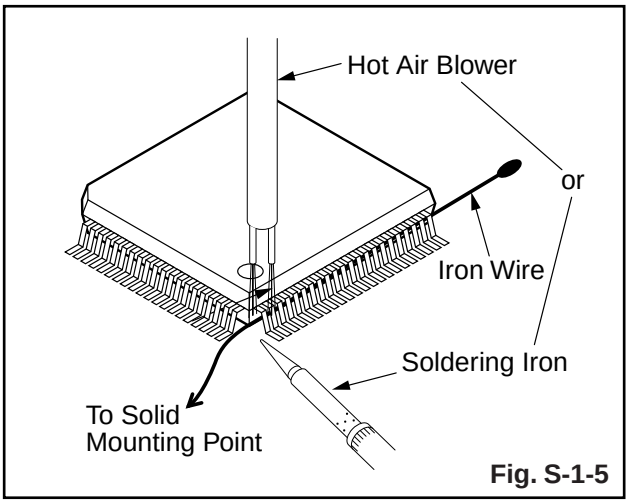

Fig. S-1-5

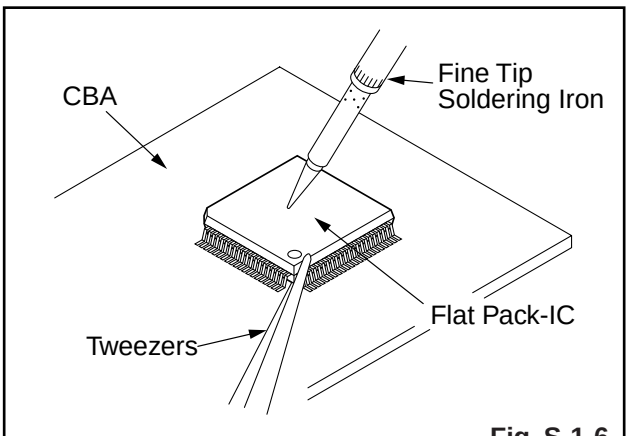

Fig. S-1-6

2. Installation

1. Using desoldering braid, remove the solder from the foil of each pin of the flat pack-IC on the CBA so you can install a replacement flat pack-IC more easily.
2. The "●" mark on the flat pack-IC indicates pin 1. (See Fig. S-1-7.) Be sure this mark matches the 1 on the PCB when positioning for installation. Then presolder the four corners of the flat pack-IC. (See Fig. S-1-8.)
3. Solder all pins of the flat pack-IC. Be sure that none of the pins have solder bridges.

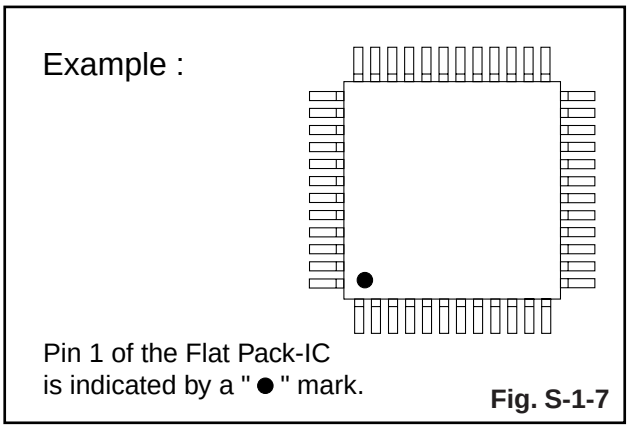

Fig. S-1-7

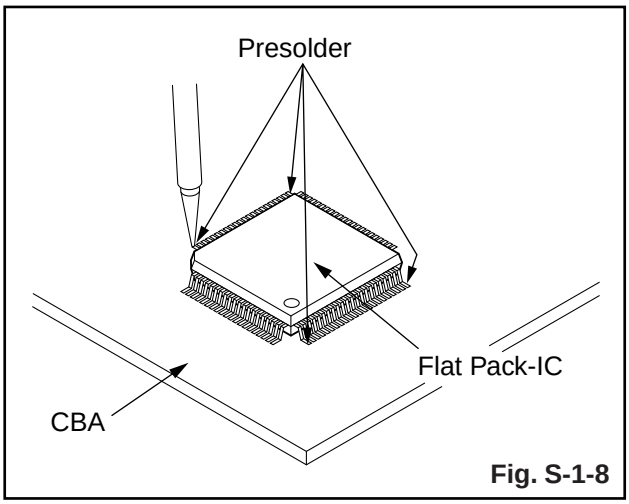

Fig. S-1-8

Instructions for Handling Semi-conductors

Electrostatic breakdown of the semi-conductors may occur due to a potential difference caused by electrostatic charge during unpacking or repair work.

1. Ground for Human Body

Be sure to wear a grounding band (1 MΩ) that is properly grounded to remove any static electricity that may be charged on the body.

2. Ground for Workbench

Be sure to place a conductive sheet or copper plate with proper grounding (1 MΩ) on the workbench or other surface, where the semi-conductors are to be placed. Because the static electricity charge on clothing will not escape through the body grounding band, be careful to avoid contacting semi-conductors with your clothing.

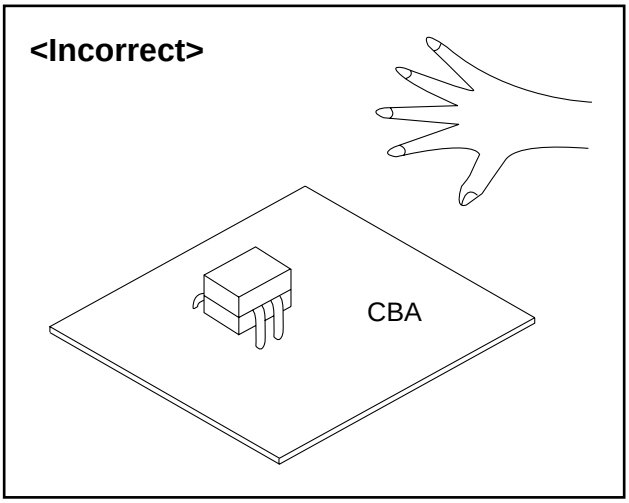

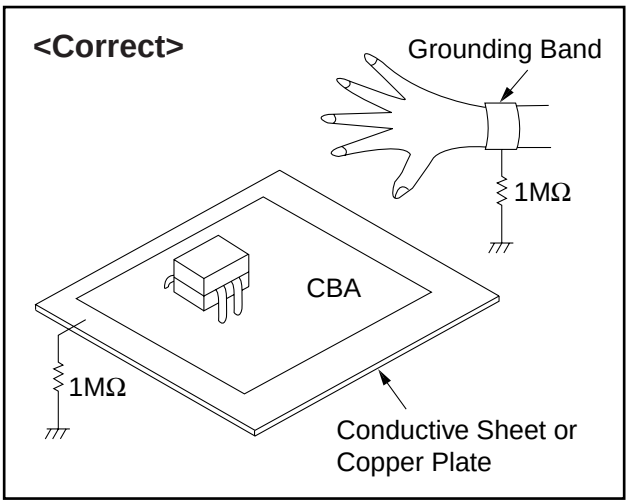

SIGNAL NAME ABBREVIATIONS

Signal Name	Function
4.43MHz	4.43MHz clock
A-COM	Audio Head Common
A-MODE	Hi-Fi Tape Detection Signal
AE-H	Audio Erase Head
AE-H/FE-H	Audio Erase Head
AL+12V	Always +12V with AC Plug Connected
AL+20V/+12V	Always +20V/+12V with AC Plug Connected
AL+5V	Always +5V with AC Plug Connected
AMPC	CTL AMP Connected Terminal
AMPVcc	AMPVcc
AMPVREF IN	V-Ref for CTL AMP
AMPVREF OUT	V-Ref for CTL AMP
AUDIO-MUTE-H	Audio Mute Control Signal (Mute="H")
AUDIO-PB/REC	Normal Audio Play Back/Record Signal
AUDIO(L)-IN	L-ch Audio Input
AUDIO(L)-OUT	L-ch Audio Output
AUDIO(R)-IN	R-ch Audio Input
AUDIO(R)-OUT	R-ch Audio Output
AVcc	A/D Converter Power Input/ Standard Voltage Input
C	C Terminal
C	CTL AMP Capacitor
C-CONT	Capstan Motor Control Signal
C-F/R	Capstan Motor FWD/REV Control Signal (FWD="L"/ REV="H")
C-FG	Capstan Motor Rotation Detection Pulse
C-POW-SW	Capstan Power Switching Pulse
C-ROTA	Color Phase Rotary Changeover SIgnal
C-SYNC	Composite Synchronized Pulse
CLKSEL	Clock Select
CTL	To Monitor for CTL AMP Output
CTL (+)	Playback/Record Control Signal (+)
CTL (-)	Playback/Record Control Signal (-)
D-CONT	Drum Motor Control Signal

Signal Name	Function
D-PFG	Drum Motor Pulse Generator
D-REC-H	Delayed Record Signal
D-V-SYNC	Dummy V-sync Output
END-S	Tape End Position Detect Signal
FE-H	Full Erase Head
FE-H-GND	Ground for Full Erase Head
FSC-IN [4.43MHz]	4.43MHz Clock Input
GND	Ground
H-A-COMP	Head Amp Comparator Signal
H-A-SW	Video Head Amp Switching Pulse
Hi-Fi-AUDIO(L)	Hi-Fi Audio L Head
Hi-Fi-AUDIO(R)	Hi-Fi Audio R Head
Hi-Fi-COM	Hi-Fi Audio Head Common
Hi-Fi-H-SW	Hi-Fi Audio Head Switching Pulse
HLF	LPF Connected Terminal (Slicer)
IIC-BUS SCL	I^2C BUS Control Clock
IIC-BUS SDA	I^2C BUS Control Data
KEY-1	Key Scan Input Signal 1
KEY-2	Key Scan Input Signal 2
LD-SW	Deck Mode Position Detector Signal
LM-FWD/REV	Loading Motor Control Signal
N-A-PB	Normal Audio Playback
N-A-REC	Normal Audio Recording
OSCin	Clock Input for letter size
OSCout	Clock Output for letter size
OSD-V-IN	OSD Video Signal Input
OSD-V-OUT	OSD Video Signal Output
OSDVcc	OSDVcc
OSDVss	OSD Ground
P-ON+5V	+5V at Power-On Signal
P-ON+9V	+9V at Power-On Signal
P-ON-L	Power On Signal at Low
PB-H-OUT	Playback control/Signal (PB="H")
PG-DELAY	Video Head Switching Pulse Signal Adjusted Voltage
POW-SAF	P-ON Power Detection Input Signal

Signal Name	Function
REC-SAF-SW	Recording Safety SW Detect (With Record tab=“L”/With out Record tab=“H”)
REMOTE	Remote Control Sensor
RESET	System Reset Signal (Reset=“L”)
RF-SW	Video Head Switching Pulse
S-CLOCK	Serial clock
S-CS	Chip Select Signal
S-DATA-IN	Serial Data Input
S-DATA-OUT	Serial Data Output
S-REEL	Supply Reel Rotation Signal
SECAM-C-IN	SECAM CHROMA Signal from PAL/SECAM DETECTOR
SECAM-FM-OUT	PB video Signal to PAL/SECAM DETECTOR
SECAM-H	SECAM Mode at High
ST-S	Tape Start Position Detector Signal
T-REEL	Take Up Reel Rotation Signal
TRICK-H	Trick Play Control Signal (Trick=“H”)
V-ENV	Video Envelope Comparator Signal
Vcc	Vcc
VG+18V	Always +18V with AC Plug Connected
VIDEO	Video Signal
VIDEO(L)-1/2	Video L Head 1/2
VIDEO(R)-1/2	Video R Head 1/2
VIDEO-COM	Video Head Common
VIDEO-IN	Video Signal Input
VIDEO-OUT	Video Signal Output
Vss	Vss(GND)
X-IN	Main Clock Input
X-OUT	Main Clock Input

ELECTRICAL ADJUSTMENT INSTRUCTIONS

General Note: "CBA" is an abbreviation for "Circuit Board Assembly."

NOTE:

1. Electrical adjustments are required after replacing circuit components and certain mechanical parts. It is important to do these adjustments only after all repairs and replacements have been completed. Also, do not attempt these adjustments unless the proper equipment is available.
2. To perform these alignment / confirmation procedures, make sure that the tracking control is set in the center position: Press either "PR -" or "PR +" button on the remote control unit first, then the "►" button (Front Panel only).

Test Equipment Required

1. Oscilloscope: Dual-trace with 10:1 probe,
   V-Range: 0.001~50V/Div.,
   F-Range: DC~AC-20MHz
2. Alignment Tape (9965 000 14514)

Head Switching Position Adjustment

Purpose:

To determine the Head Switching position during playback.

Symptom of Misadjustment:

May cause Head Switching noise or vertical jitter in the picture.

Test point	Adj.Point	Mode	Input
J909(V-OUT) TP504(RF-SW) GND	VR501 (Switching Point) (MAIN CBA)	PLAY (SP)	-----
Tape	**Measurement Equipment**	**Spec.**	
9965 000 14514	Oscilloscope	6.5H±1H (416μs±64μs)	

Connections of Measurement Equipment

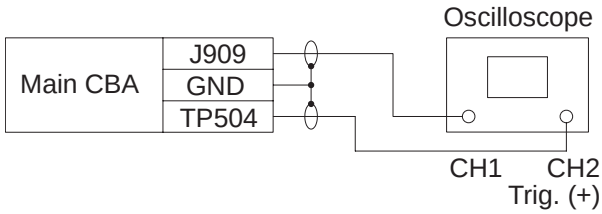

Figure 1

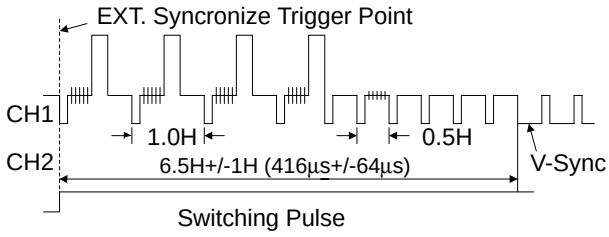

Reference Notes:

Playback the Alignment tape and adjust VR501 so that the V-sync front edge of the CH1 video output waveform is at the 6.5H±1H (416μs±64μs) delayed position from the rising edge of the CH2 head switching pulse waveform.

BLOCK DIAGRAMS

Servo / System Control Block Diagram

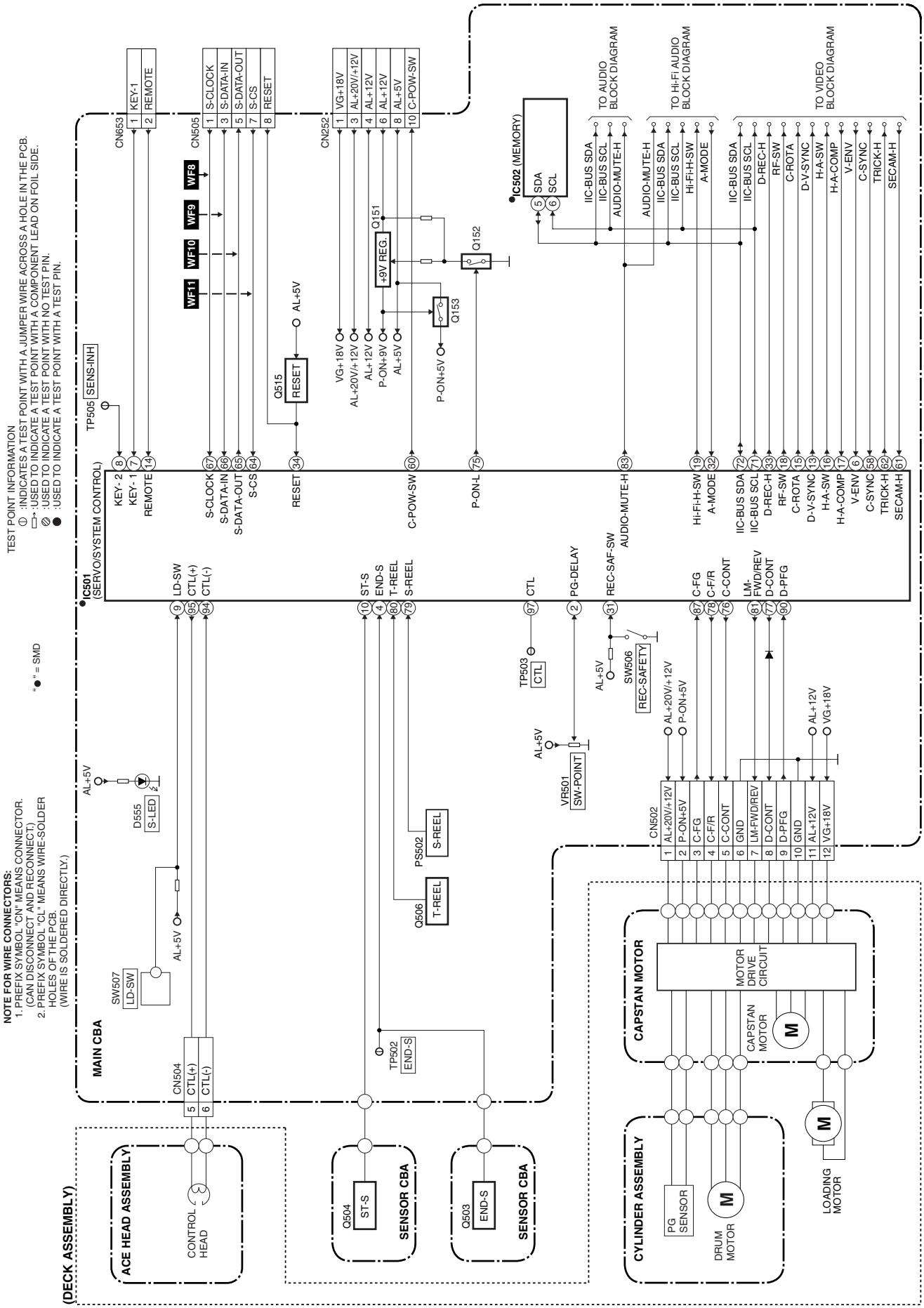

Video Block Diagram

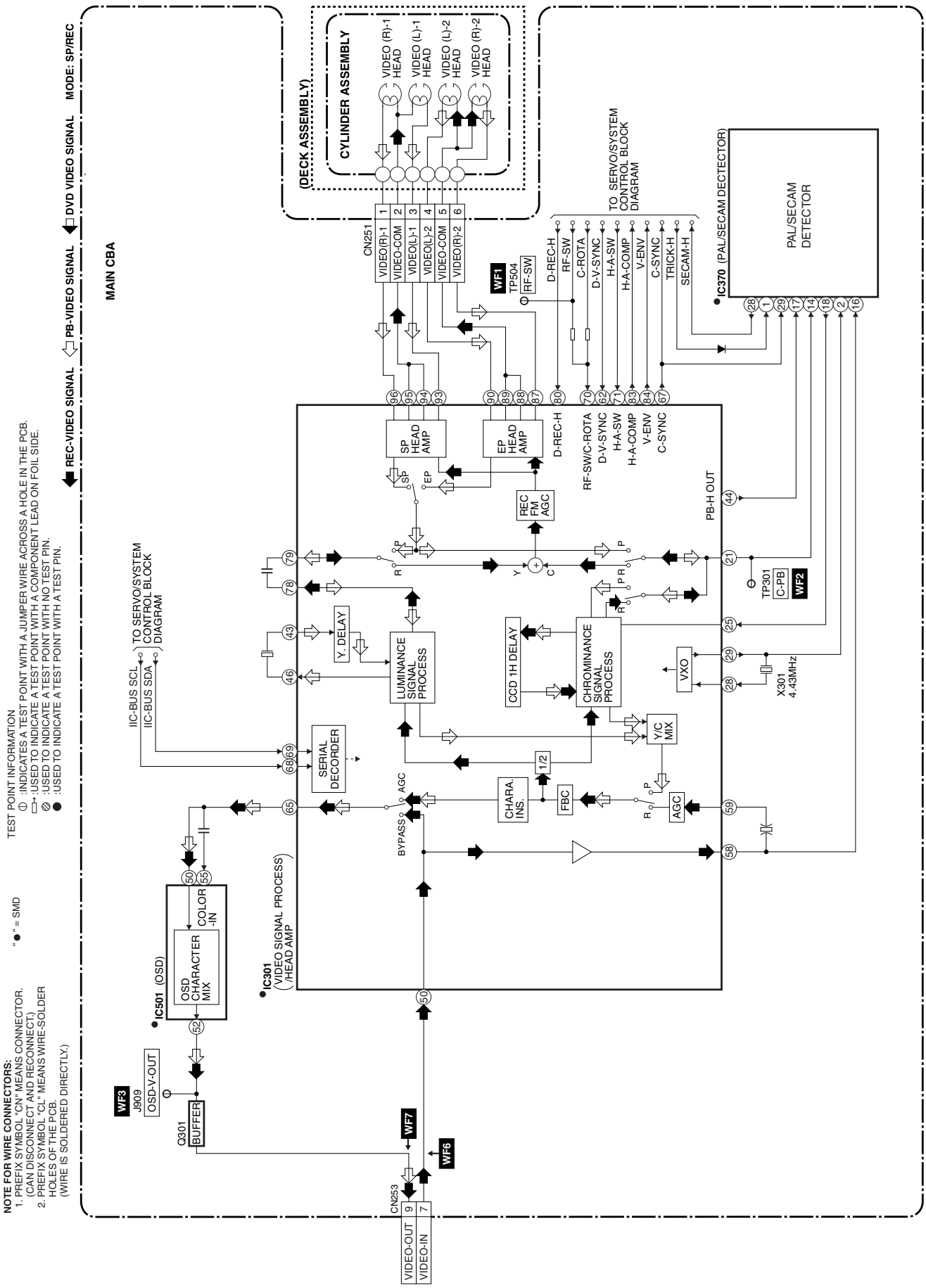

Audio Block Diagram

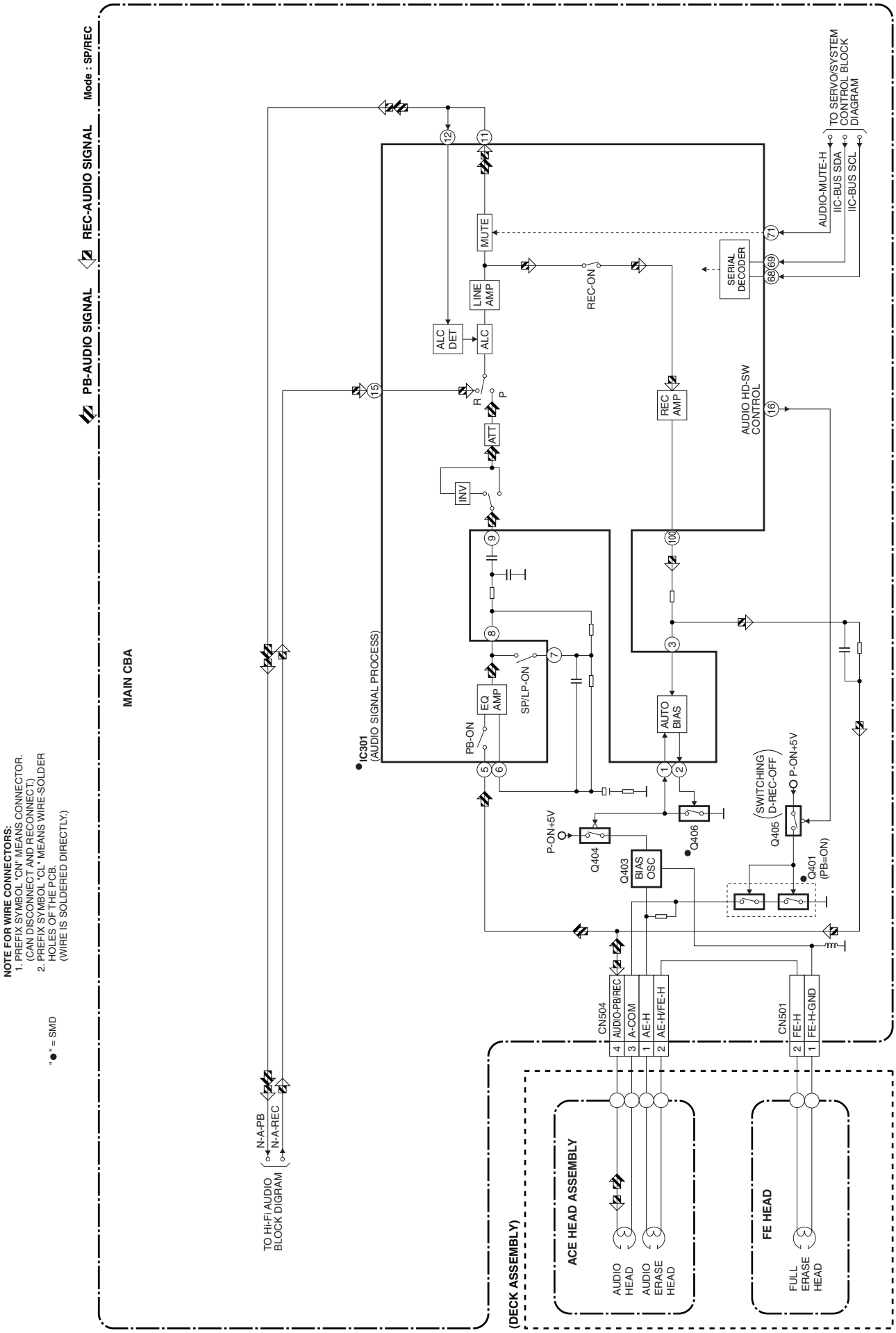

Hi-Fi Audio Block Diagram

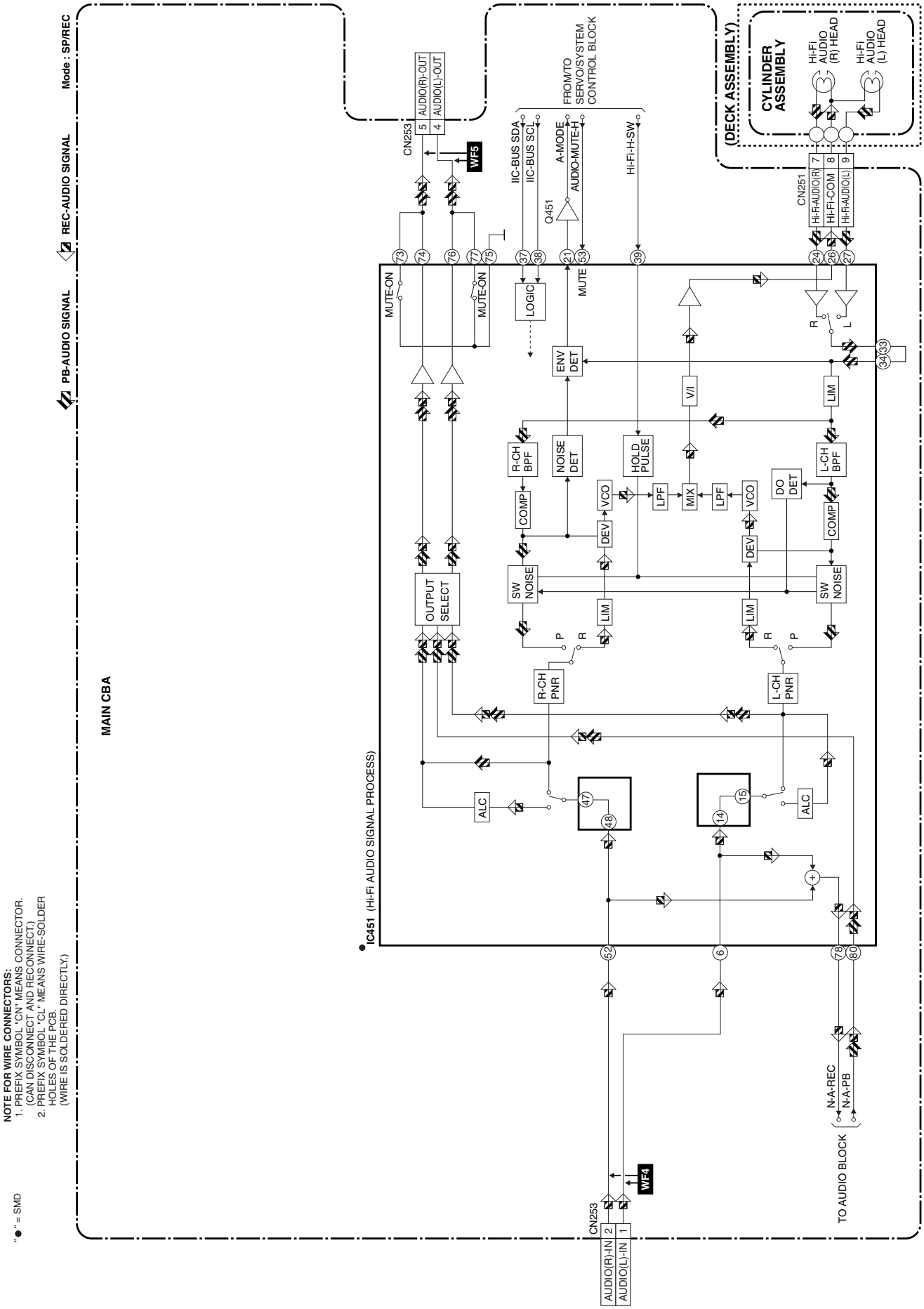

SCHEMATIC DIAGRAMS / CBA'S AND TEST POINTS

Standard Notes

WARNING

Many electrical and mechanical parts in this chassis have special characteristics. These characteristics often pass unnoticed and the protection afforded by them cannot necessarily be obtained by using replacement components rated for higher voltage, wattage, etc. Replacement parts that have these special safety characteristics are identified in this manual and its supplements; electrical components having such features are identified by the mark " ⚠ " in the schematic diagram and the parts list. Before replacing any of these components, read the parts list in this manual carefully. The use of substitute replacement parts that do not have the same safety characteristics as specified in the parts list may create shock, fire, or other hazards.

Capacitor Temperature Markings

Mark	Capacity change rate	Standard temperature	Temperature range
(B)	±10%	20°C	-25~+85°C
(F)	±30 - 80%	20°C	–25~+85°C
(SR)	±15%	20°C	–25~+85°C
(Y)	±22.5%	20°C	–25~+85°C

Capacitors and transistors are represented by the following symbols.

Notes:

1. Do not use the part number shown on these drawings for ordering. The correct part number is shown in the parts list, and may be slightly different or amended since these drawings were prepared.
2. To maintain original function and reliability of repaired units, use only original replacement parts which are listed with their part numbers in the parts list section of the service manual.
3. How to read converged lines.

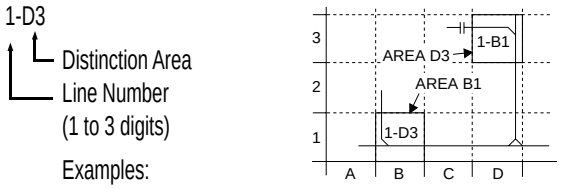

Examples:
1. "1-D3" means that line number "1" goes to the line number "1" of the area "D3".
2. "1-B1" means that line number "1" goes to the line number "1" of the area "B1".

4. All resistance values are indicated in ohms ($K=10^3$, $M=10^6$).
5. Resistor wattages are 1/4W or 1/6W unless otherwise specified.
6. All capacitance values are indicated in μF ($P=10^{-6}$ μF).
7. All voltages are DC voltages unless otherwise specified.
8. Voltage indications for PLAY and REC modes on the schematics are as shown below.

< PCB Symbols >

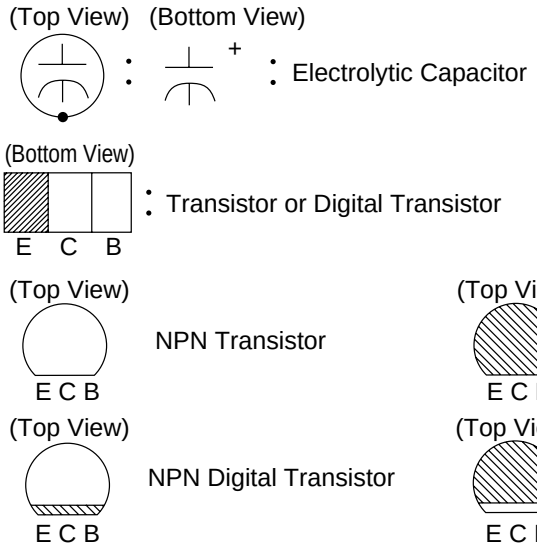

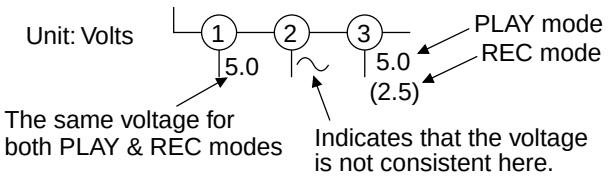

< Schematic Diagram Symbols >

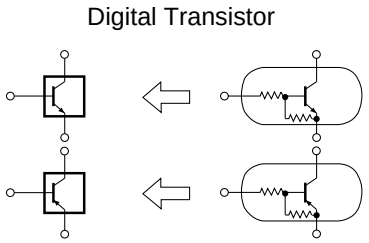

Main 1/4 Schematic Diagram Parts Location Guide

Ref No.	Position	Ref No.	Position	Ref No.	Position
CAPACITORS		CAPACITORS		RESISTORS	
C502	A-4	C562	C-4	R539	C-4
C505	E-1	CONNECTORS		R540	C-4
C506	B-1	CN501	A-2	R541	B-1
C508	C-1	CN502	F-4	R542	B-1
C509	A-2	CN504	A-3	R543	B-1
C510	A-2	CN505	F-2	R545	C-1
C511	B-3	CN653	A-1	R546	C-1
C512	A-2	DIODES		R559	E-3
C514	A-2	D510	D-4	R560	D-4
C515	B-3	D555	E-3	R567	E-4
C516	B-2	ICS		R568	E-4
C517	B-2	IC501	C-3	R569	E-4
C518	B-3	IC502	B-4	R570	D-1
C519	B-2	COILS		R572	D-4
C521	B-2	L501	E-3	R574	E-3
C522	B-1	L502	D-4	R577	E-3
C524	B-4	L503	E-3	R578	E-3
C527	C-1	TRANSISTORS		R582	E-2
C531	E-4	Q506	E-1	R583	E-2
C533	E-4	Q515	E-2	R585	E-2
C534	D-4	RESISTORS		R586	E-2
C535	D-4	R509	E-1	R588	F-3
C536	D-4	R511	A-1	R595	B-3
C538	D-4	R512	E-1	R596	B-3
C539	E-3	R513	E-1	R597	B-3
C540	E-3	R514	A-1	R598	C-1
C541	E-3	R516	A-1	SWITCHES	
C542	E-2	R517	E-3	SW506	D-1
C545	E-3	R519	A-1	SW507	A-1
C546	E-3	R523	A-1	VARIABLE RESISTOR	
C547	E-3	R525	A-3	VR501	B-1
C548	E-2	R526	A-3	CRYSTAL OSCILLATOR	
C549	E-2	R528	B-1	X501	E-2
C550	E-2	R530	C-4	MISCELLANEOUS	
C553	E-2	R531	C-4	PS502	E-1
C555	E-4	R532	C-4	TEST POINTS	
C557	A-2	R533	C-4	TP502	A-4
C559	C-4	R536	B-2	TP503	A-2
C560	C-4	R537	B-2	TP504	C-1
C561	C-4	R538	B-4	TP505	C-1

Main 1/4 & Sensor Schematic Diagram

"●" = SMD

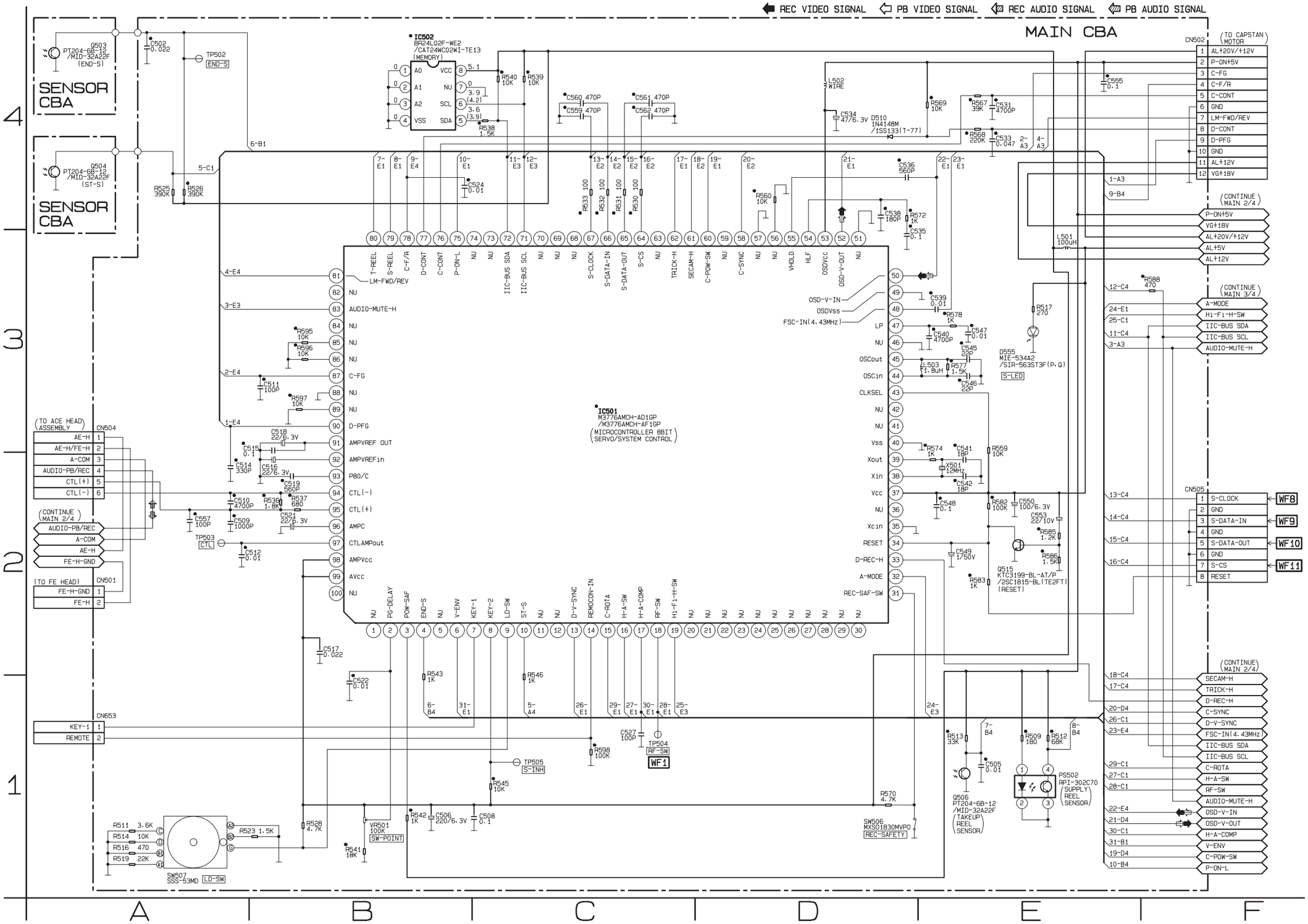

Main 2/4 Schematic Diagram

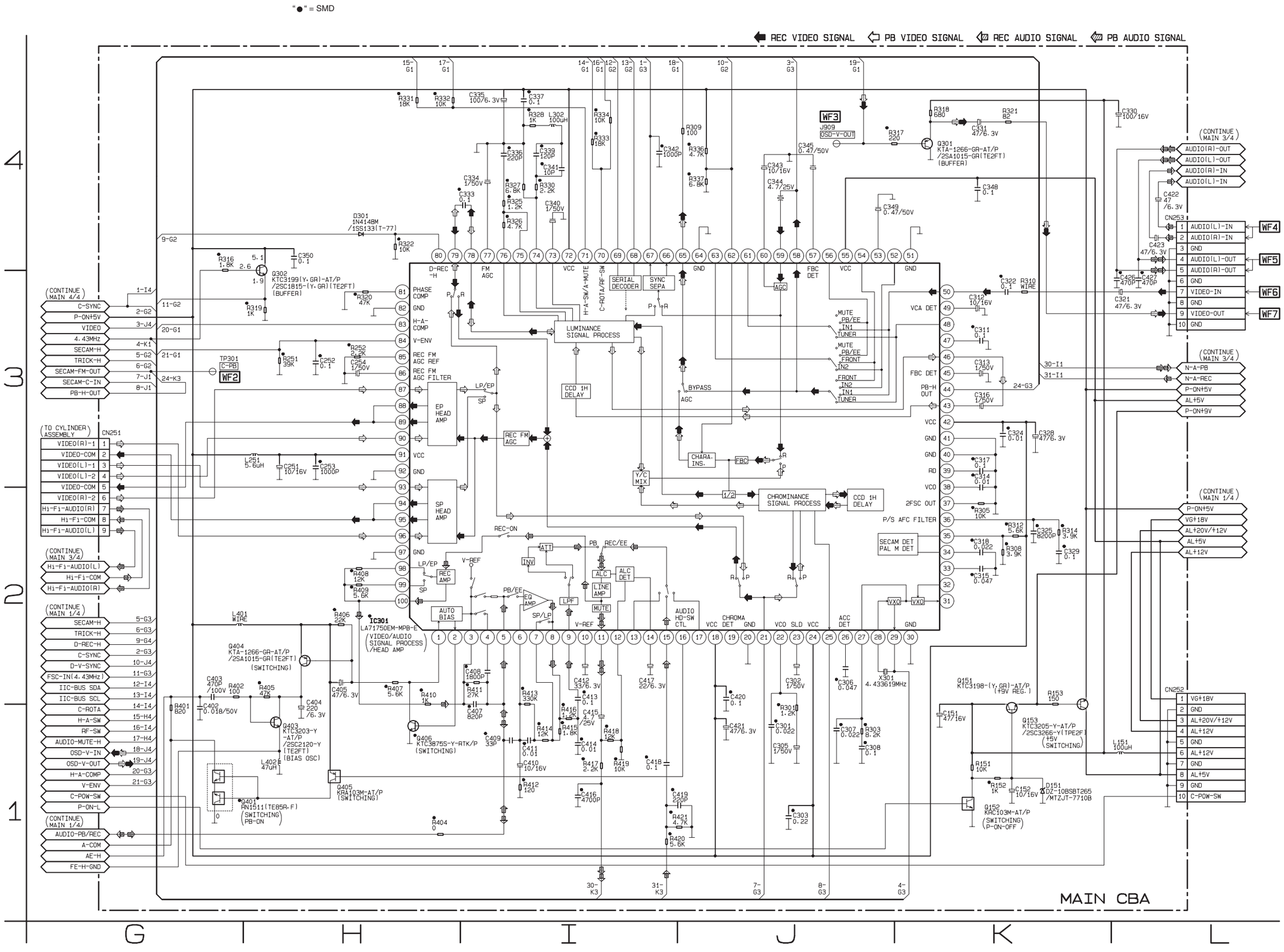

Main 2/4 Schematic Diagram Parts Location Guide

Ref No.	Position	Ref No.	Position	Ref No.	Position	Ref No.	Position
CAPACITORS		CAPACITORS		COILS		RESISTORS	
C151	K-1	C344	J-4	L251	H-3	R328	I-4
C152	K-1	C345	J-4	L302	I-4	R330	I-4
C251	H-3	C348	K-4	L401	G-2	R331	H-4
C252	H-3	C349	J-4	L402	H-1	R332	H-4
C253	H-3	C350	H-4	TRANSISTORS		R333	I-4
C254	H-3	C402	G-2	Q151	K-2	R334	I-4
C301	J-1	C403	G-2	Q152	K-1	R336	J-4
C302	J-2	C404	H-2	Q153	K-1	R337	J-4
C303	J-1	C405	H-2	Q301	K-4	R401	G-2
C305	J-1	C407	I-1	Q302	H-3	R402	G-2
C306	J-2	C408	I-2	Q401	G-1	R404	H-1
C307	J-1	C409	I-1	Q403	H-1	R405	H-2
C308	J-1	C410	I-1	Q404	G-2	R406	H-2
C311	K-3	C411	I-1	Q405	H-1	R407	H-2
C312	K-3	C412	I-2	Q406	H-1	R408	H-2
C313	K-3	C413	I-2	RESISTORS		R409	H-2
C314	K-3	C414	I-1	R151	K-1	R410	H-2
C315	K-2	C415	I-1	R152	K-1	R411	I-2
C316	K-3	C416	I-1	R153	K-2	R412	I-1
C317	K-3	C417	I-2	R251	H-3	R413	I-2
C318	K-2	C418	I-1	R252	H-3	R414	I-1
C321	L-3	C419	J-1	R301	J-1	R415	I-1
C322	K-3	C420	J-2	R303	J-1	R416	I-1
C324	K-3	C421	J-1	R305	K-2	R417	I-1
C325	K-2	C422	L-4	R308	K-2	R418	I-1
C328	K-3	C423	L-4	R309	J-4	R419	I-1
C329	K-2	C426	L-3	R310	K-3	R420	I-1
C330	L-4	C427	L-3	R312	K-2	R421	J-1
C331	K-4	CONNECTORS		R314	K-2	CRYSTAL OSCILLATOR	
C333	I-4	CN251	G-3	R316	G-4	X301	J-2
C334	I-4	CN252	L-2	R317	J-4	TEST POINT	
C335	I-4	CN253	L-4	R318	K-4	TP301	G-3
C336	I-4	DIODES		R319	H-3		
C337	I-4	D151	K-1	R320	H-3		
C339	I-4	D301	Q-4	R321	K-4		
C340	I-4	IC		R322	H-4		
C341	I-4	IC301	Q-2	R325	I-4		
C342	I-4	COILS		R326	I-4		
C343	J-4	L151	L-1	R327	I-4		

Main 3/4 Schematic Diagram Parts Location Guide

Ref No.	Position
CAPACITORS	
C452	O-2
C453	O-2
C454	O-2
C455	O-2
C456	O-2
C457	O-2
C458	P-2
C461	Q-2
C462	P-2
C463	P-2
C464	P-2
C465	P-3
C466	P-3
C467	P-3
C468	P-3
C469	P-4
C470	P-4
C471	O-4
C472	O-4
C473	O-4
C474	O-4

Ref No.	Position
CAPACITORS	
C475	O-4
C476	O-4
C478	N-3
C479	N-3
C482	N-3
C483	N-3
C484	N-2
C485	N-2
C486	N-2
C487	N-1
C489	N-1
IC	
IC451	N-2
COILS	
L451	P-3
L452	Q-2
TRANSISTOR	
Q451	Q-2
RESISTORS	
R453	N-1
R454	N-1

Ref No.	Position
RESISTORS	
R462	Q-2
R463	P-2
R464	P-3
R466	O-4
R467	N-4
R470	N-4
R479	M-3
R480	M-3
R481	M-2
R482	M-2
R483	M-2
R484	M-2

Main 3/4 Schematic Diagram

"●" = SMD

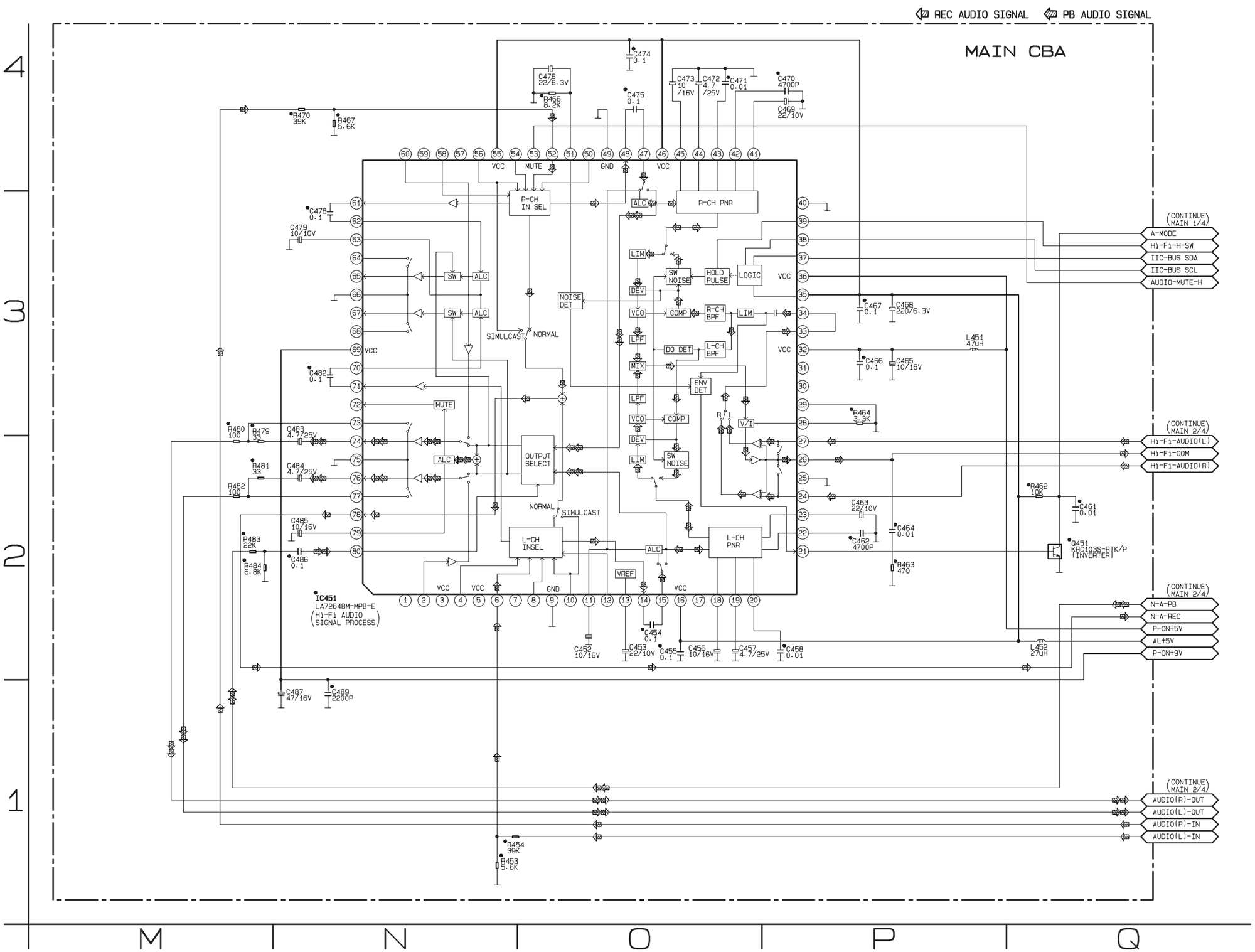

Main 4/4 Schematic Diagram

"●" = SMD

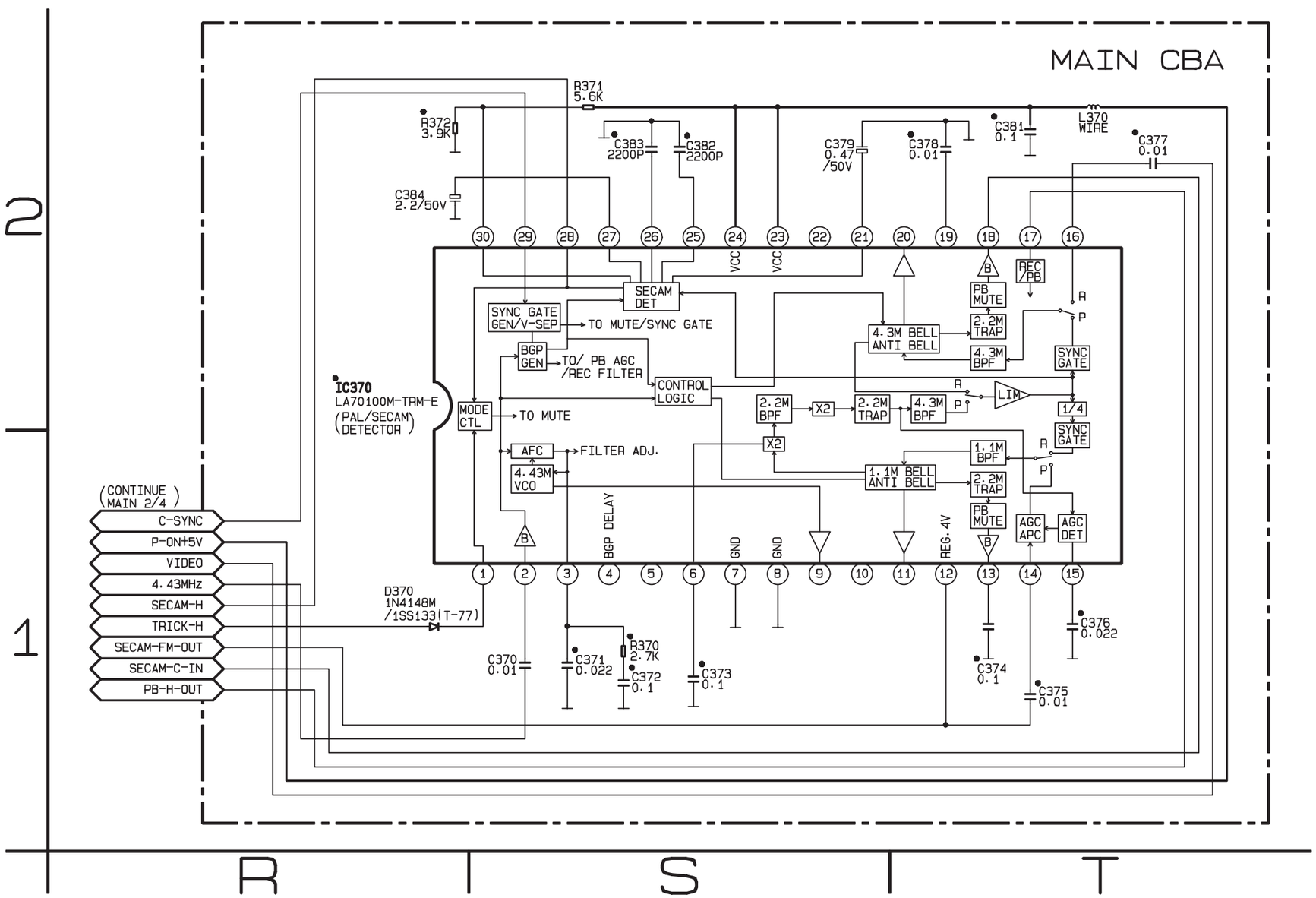

MAIN 4/4 Schematic Diagram
Parts Location Guide

Ref No.	Position
CAPACITORS	
C370	S-2
C371	S-2
C372	S-2
C373	S-2
C374	T-1
C375	T-1
C376	T-1
C377	T-2
C378	T-2
C379	S-2
C381	T-2
C382	S-2
C383	S-2
C384	R-2
DIODE	
D370	R-1
IC	
IC370	R-2
COIL	
L370	T-2
RESISTORS	
R370	S-2
R371	S-2
R372	R-2

Main CBA Top View

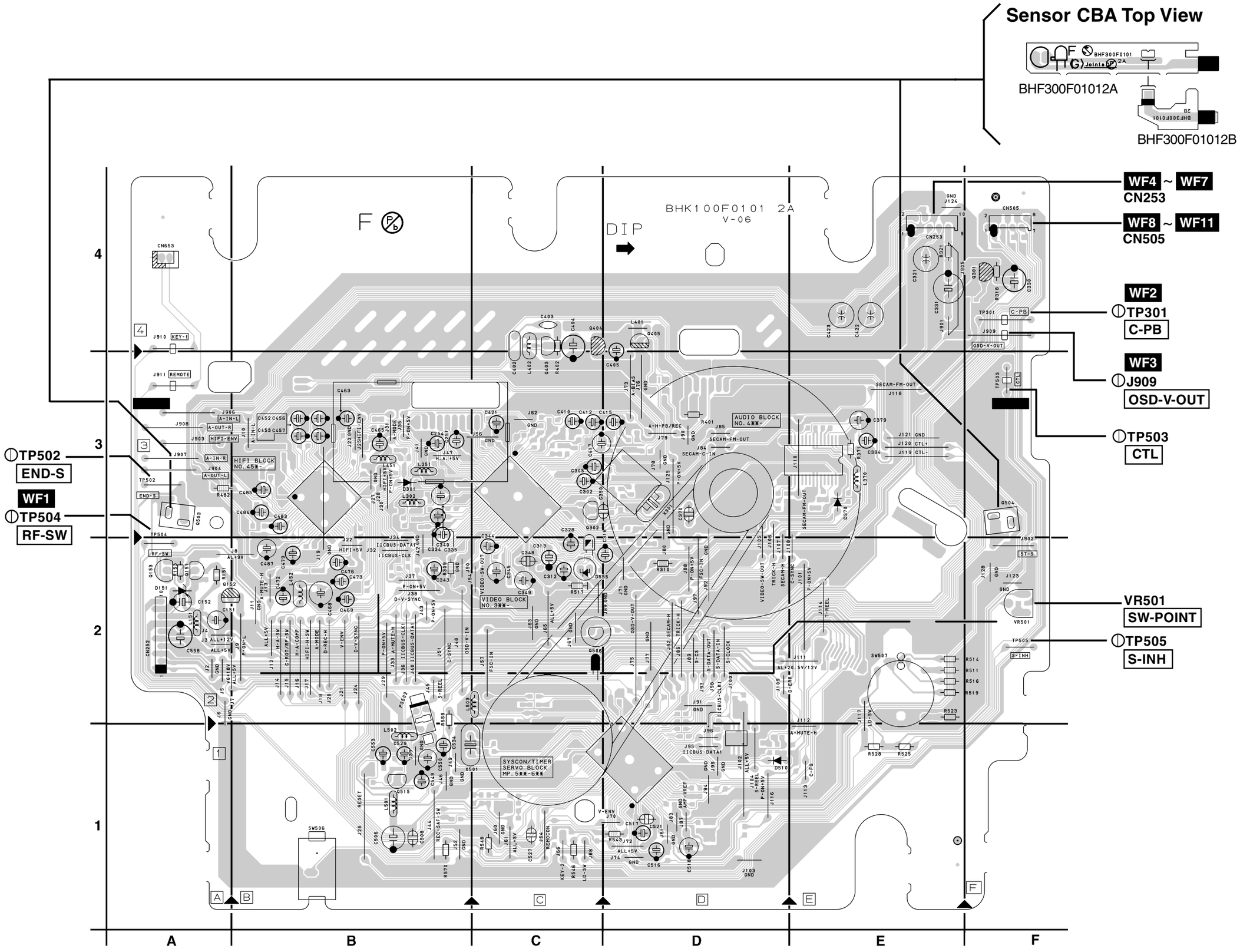

BHK100F01012A

Main CBA Bottom View

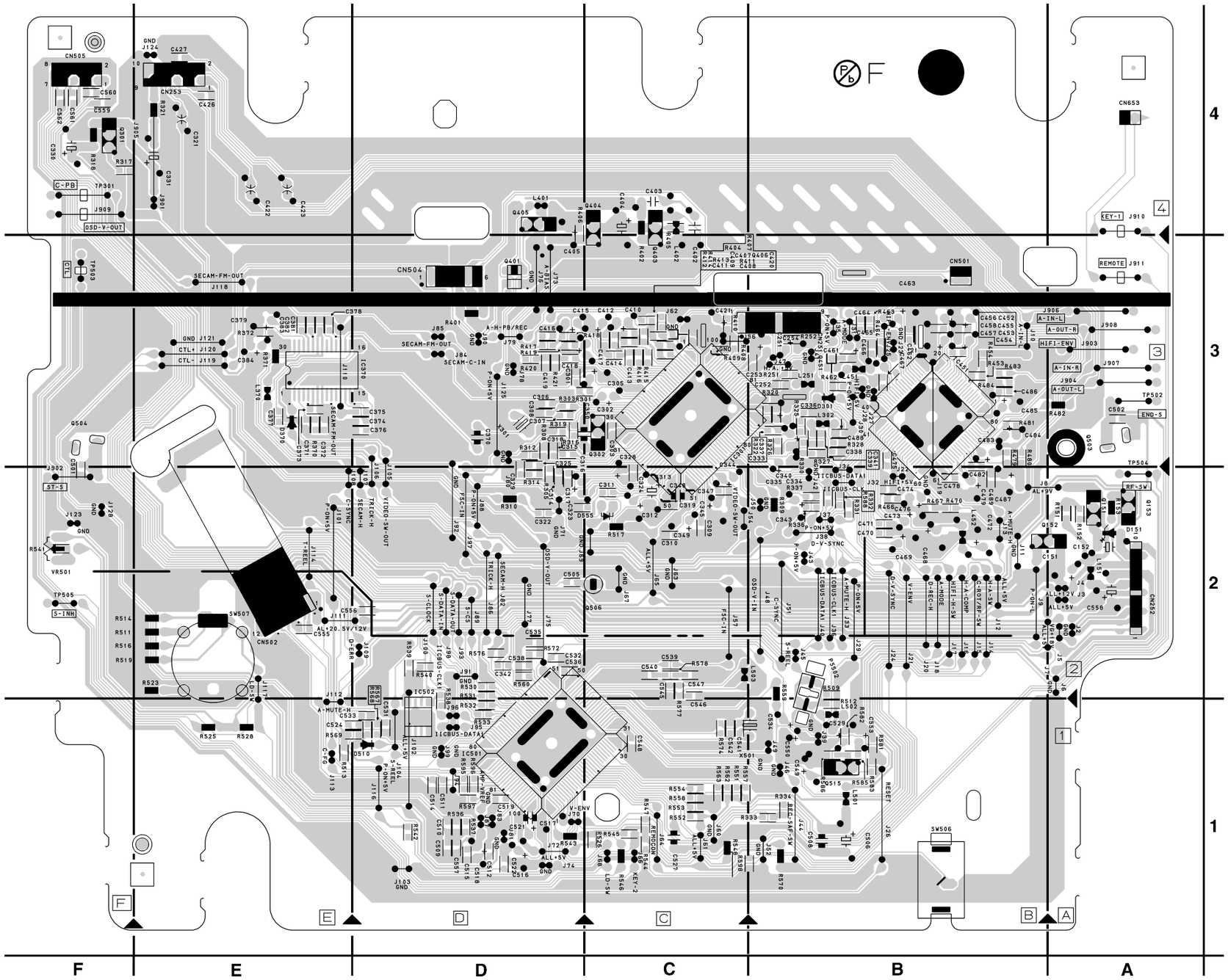

Main CBA Parts Location Guide

Ref No.	Position
CAPACITORS	
C151	A-2
C152	A-2
C251	B-3
C252	B-3
C253	B-3
C254	B-3
C301	D-3
C302	C-3
C303	C-3
C305	C-3
C306	D-3
C307	D-3
C308	D-3
C311	C-2
C312	C-2
C313	C-2
C314	D-2
C315	D-3
C316	D-3
C317	D-2
C318	D-3
C321	E-4
C322	D-2
C324	C-2
C325	D-3
C328	C-3
C329	D-2
C330	F-4
C331	E-4
C333	B-3
C334	B-2
C335	B-2
C336	B-3
C337	B-3
C339	B-3
C340	B-2
C341	B-3
C342	D-2
C343	B-2
C344	C-3
C345	C-2
C348	C-2

Ref No.	Position
CAPACITORS	
C349	C-2
C350	C-3
C370	D-3
C371	E-3
C372	E-3
C373	E-3
C374	D-3
C375	D-3
C376	D-3
C377	E-3
C378	E-3
C379	E-3
C381	E-3
C382	E-3
C383	E-3
C384	E-3
C402	C-3
C403	C-4
C404	C-4
C405	D-3
C407	C-3
C408	C-3
C409	C-3
C410	C-3
C411	C-3
C412	C-3
C413	C-3
C414	C-3
C415	C-3
C416	D-3
C417	C-3
C418	D-3
C419	D-3
C420	B-3
C421	C-3
C422	E-4
C423	E-4
C426	E-4
C427	E-4
C452	B-3
C453	B-3
C454	B-3

Ref No.	Position
CAPACITORS	
C455	B-3
C456	B-3
C457	B-3
C458	B-3
C461	B-3
C462	B-3
C463	B-3
C464	B-3
C465	B-3
C466	B-3
C467	B-3
C468	B-2
C469	B-2
C470	B-2
C471	B-2
C472	B-2
C473	B-2
C474	B-2
C475	B-3
C476	B-2
C478	B-2
C479	B-2
C482	B-2
C483	B-3
C484	B-3
C485	B-3
C486	B-3
C487	B-2
C489	B-2
C502	A-3
C505	D-2
C506	B-1
C508	B-1
C509	D-1
C510	D-1
C511	D-1
C512	D-1
C514	D-1
C515	D-1
C516	D-1
C517	D-1
C518	D-1

Ref No.	Position
CAPACITORS	
C519	D-1
C521	D-1
C522	D-1
C524	E-1
C527	C-1
C531	D-1
C533	E-1
C534	B-1
C535	D-2
C536	D-2
C538	D-2
C539	C-2
C540	C-2
C541	C-1
C542	C-1
C545	C-2
C546	C-1
C547	C-2
C548	C-1
C549	B-1
C550	B-1
C553	B-1
C555	E-2
C557	D-1
C559	F-4
C560	F-4
C561	F-4
C562	F-4
CONNECTORS	
CN251	B-3
CN252	A-2
CN253	E-4
CN501	B-3
CN502	E-2
CN504	D-3
CN505	F-4
CN653	A-4
DIODES	
D151	A-2
D301	B-3
D370	E-3
D510	D-1

Ref No.	Position
DIODES	
D555	C-2
ICS	
IC301	C-3
IC370	D-3
IC451	B-3
IC501	D-1
IC502	D-2
COILS	
L151	A-2
L251	B-3
L302	B-3
L370	E-3
L401	D-4
L402	C-3
L451	B-3
L452	B-2
L501	B-1
L502	B-1
L503	B-2
TRANSISTORS	
Q151	A-2
Q152	A-2
Q153	A-2
Q301	F-4
Q302	C-3
Q401	D-3
Q403	C-3
Q404	C-4
Q405	D-4
Q406	B-3
Q451	B-3
Q506	C-2
Q515	B-1
RESISTORS	
R151	A-2
R152	A-2
R153	A-2
R251	B-3
R252	B-3
R301	D-3
R303	D-3
R305	D-2

Ref No.	Position
RESISTORS	
R308	D-3
R309	B-2
R310	D-2
R312	D-3
R314	D-2
R316	D-3
R317	F-4
R318	F-4
R319	D-3
R320	B-3
R321	E-4
R322	B-3
R325	B-3
R326	B-3
R327	B-3
R328	B-3
R330	B-3
R331	B-2
R332	B-2
R333	C-1
R334	B-1
R336	B-2
R337	B-2
R370	E-3
R371	E-3
R372	E-3
R401	D-3
R402	C-3
R404	C-3
R405	C-3
R406	D-4
R407	B-3
R408	C-3
R409	C-3
R410	C-3
R411	C-3
R412	C-3
R413	C-3
R414	C-3
R415	C-3
R416	C-3
R417	D-3

Ref No.	Position
RESISTORS	
R418	C-3
R419	D-3
R420	D-3
R421	D-3
R453	B-3
R454	B-3
R462	B-3
R463	B-3
R464	B-3
R466	B-2
R467	B-2
R470	B-2
R479	B-3
R480	B-3
R481	B-3
R482	A-3
R483	B-3
R484	B-3
R509	B-2
R511	F-2
R512	B-1
R513	E-1
R514	F-2
R516	F-2
R517	C-2
R519	F-2
R523	E-2
R525	E-1
R526	C-1
R528	E-1
R530	D-2
R531	D-2
R532	D-1
R533	D-1
R536	D-1
R537	D-1
R538	D-1
R539	D-2
R540	D-2
R541	F-2
R542	D-1
R543	D-1

Ref No.	Position
RESISTORS	
R545	C-1
R546	C-1
R559	B-2
R560	D-2
R567	D-2
R568	D-2
R569	E-1
R570	B-1
R572	D-2
R574	C-1
R577	C-1
R578	C-2
R582	B-1
R583	B-1
R585	B-1
R586	B-1
R588	B-2
R595	D-1
R596	D-1
R597	D-1
R598	C-1
SWITCHES	
SW506	B-1
SW507	E-2
VARIABLE RESISTORS	
VR501	F-2
CRYSTAL OSCILLATORS	
X301	D-3
X501	B-1
MISCELLANEOUS	
PS502	B-2
TEST POINTS	
TP301	F-4
TP502	A-3
TP503	F-3
TP504	A-3
TP505	F-2

WAVEFORMS

NOTE: Input
VCR: COLOR BAR SIGNAL (WITH 1KHz AUDIO SIGNAL)
(WF1~WF11)

WF2 UPPER TP301

WF1 LOWER TP504

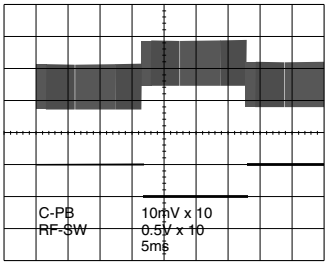

WF3 UPPER J909

WF1 LOWER TP504

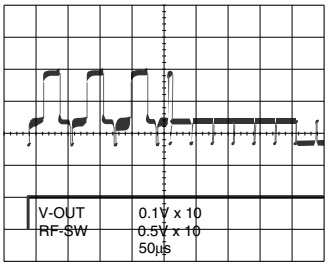

WF3 J909

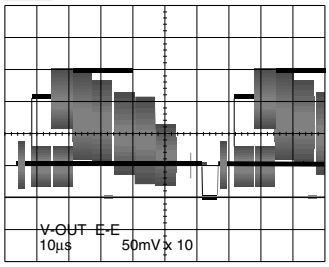

WF4 Pin 1, 2 of CN253

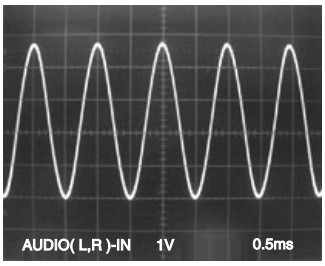

WF5 Pin 4, 5 of CN253

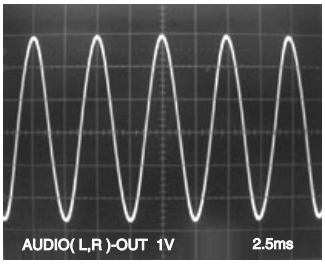

WF6 Pin 7 of CN253

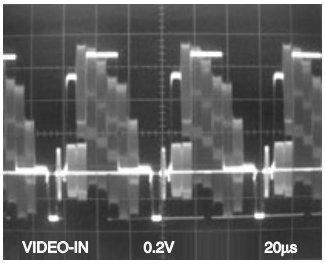

WF7 Pin 9 of CN253

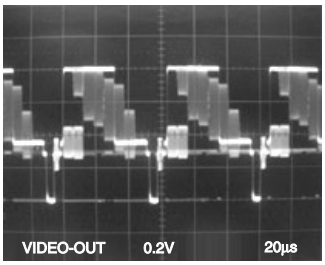

WF8 Pin 1 of CN505

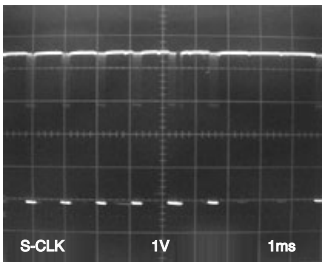

WF9 Pin 3 of CN505

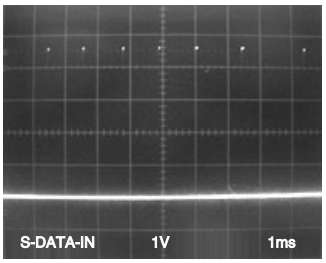

WF10 Pin 5 of CN505

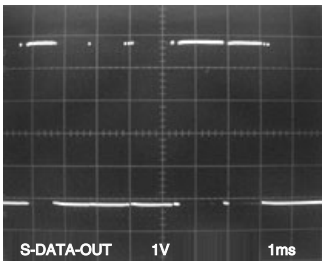

WF11 Pin 7 of CN505

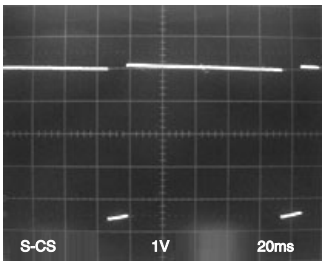

MAIN CBA

CN252

Pin No.	Voltage	WF No.
1	18.1	
2	0	
3	12.7	
4	12.1	
5	0	
6	12.0	
7	0	
8	5.3	
9	0	
10	0	

CN253

Pin No.	Voltage	WF No.
1		WF4
2		WF4
3	0	
4		WF5
5		WF5
6	0	
7		WF6
8	0	
9		WF7
10	0	

CN505

Pin No.	Voltage	WF No.
1		WF8
2	0	
3		WF9
4	0	
5		WF10
6	0	
7		WF11
8	4.8	

WIRING DIAGRAM

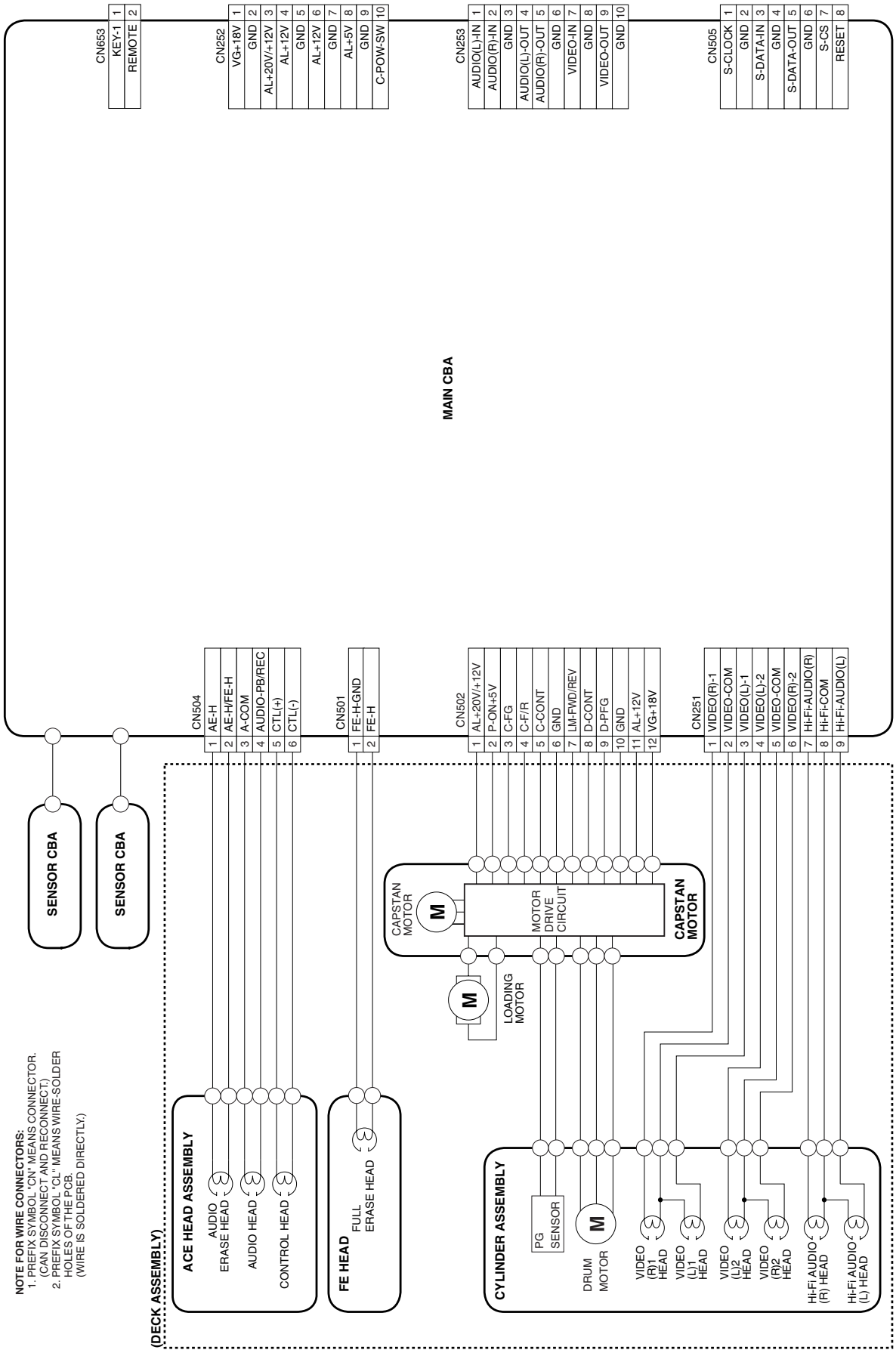

IC PIN FUNCTION DESCRIPTIONS

IC501(SERVO / SYSTEM CONTROL IC)

"H" ≥ 4.5V, "L" ≤ 1.0V

Pin No.	IN/ OUT	Signal Name	Function	Active Level
1	-	NU	Not Used	-
2	IN	PG-DELAY	Video Head Switching Pulse Signal Adjusted Voltage	A/D
3	IN	POW-SAF	P-ON Power Detection Input Signal	A/D
4	IN	END-S	Tape End Position Detect Signal	A/D
5	-	NU	Not Used	-
6	IN	V-ENV	Video Envelope Comparator Signal	A/D
7	IN	KEY-1	Key Scan Input Signal 1	A/D
8	IN	KEY-2	Key Scan Input Signal 2	A/D
9	IN	LD-SW	Deck Mode Position Detector Signal	A/D
10	IN	ST-S	Tape Start Position Detector Signal	A/D
11	-	NU	Not Used	-
12	-	NU	Not Used	-
13	OUT	D-V-SYNC	Dummy V-sync Output	H/Hi-z
14	IN	REMOCON -IN	Remote Control Sensor	L
15	OUT	C-ROTA	Color Phase Rotary Changeover SIgnal	H/L
16	OUT	H-A-SW	Video Head Amp Switching Pulse	H/L
17	IN	H-A-COMP	Head Amp Comparator Signal	H/L
18	OUT	RF-SW	Video Head Switching Pulse	H/L
19	OUT	Hi-Fi-H-SW	Hi-Fi Audio Head Switching Pulse	H/L
20	-	NU	Not Used	-
21	-	NU	Not Used	-
22	-	NU	Not Used	-
23	-	NU	Not Used	-
24	-	NU	Not Used	-
25	-	NU	Not Used	-
26	-	NU	Not Used	-
27	-	NU	Not Used	-
28	-	NU	Not Used	-
29	-	NU	Not Used	-
30	-	NU	Not Used	-
31	IN	REC-SAF-SW	Recording Safety SW Detect (With Record tab="L"/With out Record tab="H")	H
32	IN	A-MODE	Hi-Fi Tape Detection Signal	L
33	OUT	D-REC-H	Delayed Record Signal	H
34	IN	RESET	System Reset Signal (Reset="L")	L
35	IN	Xcin	Sub Clock (GND)	-
36	-	NU	Not Used	-
37	-	Vcc	Vcc	-
38	IN	Xin	Main Clock Input	-
39	OUT	Xout	Main Clock Input	-
40	-	Vss	Vss(GND)	-
41	-	NU	Not Used	-
42	-	NU	Not Used	-
43	IN	CLKSEL	Clock Select (VCC Pull UP)	-
44	IN	OSCin	Clock Input for letter size	-
45	OUT	OSCout	Clock Output for letter size	-
46	-	NU	Not Used	-
47	-	LP	LP	-
48	IN	FSC-IN [4.43MHz]	4.43MHz Clock Input	-
49	-	OSDVss	OSDVss	-
50	IN	OSD-V-IN	OSD Video Signal Input	-
51	-	NU	Not Used	-
52	OUT	OSD-V-OUT	OSD Video Signal Output	-
53	-	OSDVcc	OSDVcc	-
54	-	HLF	LPF Connected Terminal (Slicer)	-

Pin No.	IN/ OUT	Signal Name	Function	Active Level
55	-	VHOLD	COLOR-IN	-
56	-	NU	Not Used	-
57	-	NU	Not Used	-
58	IN	C-SYNC	Composite Synchronized Pulse	PULSE
59	-	NU	Not Used	-
60	OUT	C-POW-SW	Capstan Power Switching Signal	H/L
61	IN	SECAM-H	SECAM Video Signal Input	H
62	OUT	TRICK-H	Special playback = “H” in SECAM Mode	H
63	-	NU	Not Used	-
64	IN	S-CS	DVD (MCU) SIO Interface CS	L
65	OUT	S-DATA-OUT	DVD (MCU) SIO Interface Clock Out	H/L
66	IN	S-DATA-IN	DVD (MCU) SIO Interface Data In	H/L
67	OUT	S-CLOCK	DVD (MCU) SIO Interface Clock	H/L
68	-	NU	Not Used	-
69	-	NU	Not Used	-
70	-	NU	Not Used	-
71	OUT	IIC-BUS SCL	I^2C BUS Control Clock	H/L
72	IN/ OUT	IIC-BUS SDA	I^2C BUS Control Data	H/L
73	-	NU	Not Used	-
74	-	NU	Not Used	-
75	OUT	P-ON-L	Power On Signal at Low	L
76	OUT	C-CONT	Capstan Motor Control Signal	PWM
77	OUT	D-CONT	Drum Motor Control Signal	PWM
78	OUT	C-F/R	Capstan Motor FWD/ REV Control Signal (FWD=”L”/REV=”H”)	H/L
79	IN	S-REEL	Supply Reel Rotation Signal	PULSE
80	IN	T-REEL	Take Up Reel Rotation Signal	PULSE
81	OUT	LM-FWD/ REV	Loading Motor Control Signal	H/L/ Hi-z
82	-	NU	Not Used	-

Pin No.	IN/ OUT	Signal Name	Function	Active Level
83	OUT	A-MUTE-H	Audio Mute Control Signal	H
84	-	NU	Not Used	-
85	-	NU	Not Used	-
86	-	NU	Not Used	-
87	IN	C-FG	Capstan Motor Rotation Detection Pulse	PULSE
88	-	NU	Not Used (GND)	-
89	-	NU	Not Used	-
90	IN	D-PFG	Drum Motor Pulse Generator	PULSE
91	-	AMPVREF OUT	V-Ref for CTL AMP	-
92	-	AMPVREFin	V-Ref for CTL AMP	-
93	-	P80/C	P80/C Terminal	-
94	IN/ OUT	CTL (-)	Playback/Record Control Signal (-)	H/L
95	IN/ OUT	CTL (+)	Playback/Record Control Signal (+)	H/L
96	-	AMPC	CTL AMP Connected Terminal	-
97	-	CTLAMP out	To Monitor for CTL AMP Output	PULSE
98	-	AMPVcc	AMPVcc	-
99	-	AVcc	A/D Converter Power Input/ Standard Voltage Input	-
100	-	NU	Not Used	-

Notes:

Abbreviation for Active Level:

PWM -----Pulse Wide Modulation

A/D--------Analog - Digital Converter

LEAD IDENTIFICATIONS

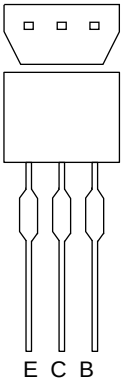

KRA103M-AT/P
KRC103M-AT/P
KTA-1266-GR-AT/P
KTC3199-(BL,GR,Y)-AT/P

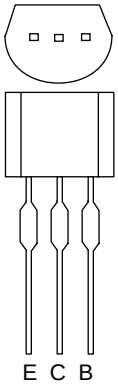

2SA1015-GR(TE2 F T)
2SC1815-(BL,GR,Y)(TE2 F T)
2SC2120-Y(TE2 F T)
2SC3266-Y(TPE2 F)
KTC3203-Y-AT/P
KTC3205-Y-AT/P
KTC3198-(GR,Y)-AT/P

LA70100M-TRM-E

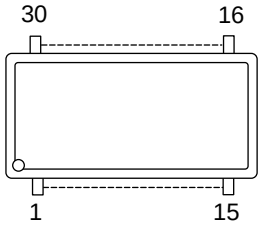

MID-32A22F
PT204-6B-12

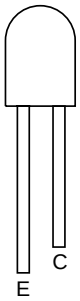

BR24L02F-WE2
CAT24WC02WI-TE13

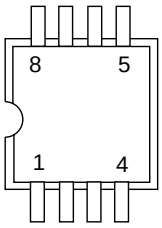

RN1511(TE85R.F)

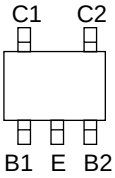

KRC103S-RTK/P
KTC3875S-Y-RTK/P

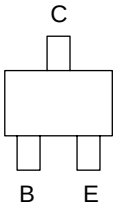

LA72648M-MPB-E

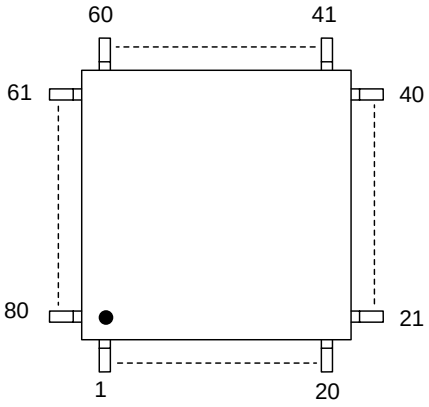

LA71750EM-MPB-E
M3776AMCH-AD1GP
M3776AMCH-AF1GP

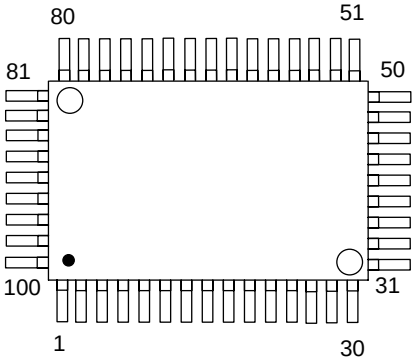

Note:

A: Anode
K: Cathode
E: Emitter
C: Collector
B: Base
R: Reference
S: Source
G: Gate
D: Drain

ELECTRICAL PARTS LIST

PRODUCT SAFETY NOTE: Products marked with a ⚠ have special characteristics important to safety. Before replacing any of these components, read carefully the product safety notice in this service manual. Don't degrade the safety of the product through improper servicing.

NOTES:
Parts that are not assigned part numbers (---------) are not available.
Tolerance of Capacitors and Resistors are noted with the following symbols.

C.....±0.25%	D.....±0.5%	F.....±1%
G.....±2%	J.....±5%	K.....±10%
M.....±20%	N.....±30%	Z.....+80/-20%

ELECTRICAL PARTS LIST

Pos.No.	⚠	12 NC	Description	VCR Module
			MCV CBA	**1**
			Consists of the following:	
			MAIN CBA	**1**
			SENSOR CBA	**1**
			MAIN CBA	
2B7			SHIELD ASSEMBLY H9500ED	1
2B8			BUSH LED(F) H3700UD	1
2B46			ROHM HOLDER H7770JD	1
PS502			PHOTO INTERRUPTER RPI-302C70	1
TP301			PCB JUMPER D0.6-P14.0	1
TP502			PCB JUMPER D0.6-P10.0	1
TP503			PCB JUMPER D0.6-P6.0	1
TP504			PCB JUMPER D0.6-P8.0	1
TP505			PCB JUMPER D0.6-P7.5	1
VR501			CARBON P.O.T. VZ067TL1 B104 PB(F)	1
X301			XTAL 4.433619MHZ	1
X301			QUARTZ CRYSTAL 4.433619MHZ	1
X301			XTAL 1K*044334EE	1
X501			QUARTS CRYSTAL 12.000000MHZ	1
X501			XTAL 12MHZ 12.000MHZ	1
CAPACITORS				
C151			ELECTROLYTIC CAP. 47UF/16V M H7	1
C151			ALUMINUM ELECTROLYTIC CAP 47UF/16V H7	1
C152			ELECTROLYTIC CAP. 10UF/16V M H7	1
C152			ELECTROLYTIC CAP. 10UF/16V M H7	1
C251			ELECTROLYTIC CAP. 10UF/16V M H7	1
C251			ALUMINUM ELECTROLYTIC CAP 10UF/16V H7	1
C252			CHIP CERAMIC CAP.(1608) F Z 0.1UF/ 50V	1
C252			CHIP CERAMIC CAP.(1608) F Z 0.1UF/ 25V	1
C253			CHIP CERAMIC CAP.(1608) B K 1000PF/50V	1
C254			ELECTROLYTIC CAP. 1UF/50V M H7	1
C254			ALUMINUM ELECTROLYTIC CAP 1UF/ 50V H7	1
C301			CHIP CERAMIC CAP.(1608) B K 0.022UF/50V	1
C301			CHIP CERAMIC CAP.(1608) B K 0.022UF/25V	1
C302			ELECTROLYTIC CAP. 1UF/50V M H7	1
C302			ALUMINUM ELECTROLYTIC CAP 1UF/ 50V H7	1
C303			CHIP CERAMIC CAP. F Z 0.22UF/16V	1
C305			ELECTROLYTIC CAP. 1UF/50V M H7	1

ELECTRICAL PARTS LIST

Pos.No.	⚠	12 NC	Description	VCR Module
C305			ALUMINUM ELECTROLYTIC CAP 1UF/ 50V H7	1
C306			CHIP CERAMIC CAP.(1608) B K 0.047UF/50V	1
C306			CHIP CERAMIC CAP.(1608) B K 0.047UF/25V	1
C307			CHIP CERAMIC CAP.(1608) B K 0.022UF/50V	1
C307			CHIP CERAMIC CAP.(1608) B K 0.022UF/25V	1
C308			CHIP CERAMIC CAP.(1608) F Z 0.1UF/ 50V	1
C308			CHIP CERAMIC CAP.(1608) F Z 0.1UF/ 25V	1
C311			CHIP CERAMIC CAP.(1608) F Z 0.1UF/ 50V	1
C311			CHIP CERAMIC CAP.(1608) F Z 0.1UF/ 25V	1
C312			ELECTROLYTIC CAP. 10UF/16V M H7	1
C312			ALUMINUM ELECTROLYTIC CAP 10UF/16V H7	1
C313			ELECTROLYTIC CAP. 1UF/50V M H7	1
C313			ELECTROLYTIC CAP. 1UF/50V M H7	1
C314			CHIP CERAMIC CAP.(1608) B K 0.01UF/ 50V	1
C315			CHIP CERAMIC CAP.(1608) B K 0.047UF/50V	1
C315			CHIP CERAMIC CAP.(1608) B K 0.047UF/25V	1
C316			ELECTROLYTIC CAP. 1UF/50V M H7	1
C316			ALUMINUM ELECTROLYTIC CAP 1UF/ 50V H7	1
C317			CHIP CERAMIC CAP.(1608) F Z 0.1UF/ 50V	1
C317			CHIP CERAMIC CAP.(1608) F Z 0.1UF/ 25V	1
C318			CHIP CERAMIC CAP.(1608) B K 0.022UF/50V	1
C318			CHIP CERAMIC CAP.(1608) B K 0.022UF/25V	1
C321			ELECTROLYTIC CAP. 47UF/6.3V M NP H7	1
C322			CHIP CERAMIC CAP.(1608) F Z 0.1UF/ 50V	1
C322			CHIP CERAMIC CAP.(1608) F Z 0.1UF/ 25V	1
C324			CHIP CERAMIC CAP.(1608) B K 0.01UF/ 50V	1
C325			CHIP CERAMIC CAP. B K 8200PF/50V	1
C328			ELECTROLYTIC CAP. 47UF/6.3V M H7	1
C328			ALUMINUM ELECTROLYTIC CAP 47UF/6.3V H7	1
C329			CHIP CERAMIC CAP.(1608) F Z 0.1UF/ 50V	1
C329			CHIP CERAMIC CAP.(1608) F Z 0.1UF/ 25V	1
C330			ELECTROLYTIC CAP. 100UF/16V M	1
C330			ELECTROLYTIC CAP. 100UF/16V M	1
C331			ELECTROLYTIC CAP. 470UF/6.3V M	1
C331			ELECTROLYTIC CAP. 470UF/6.3V M	1
C333			CHIP CERAMIC CAP.(1608) F Z 0.1UF/ 50V	1
C333			CHIP CERAMIC CAP.(1608) F Z 0.1UF/ 25V	1
C334			ELECTROLYTIC CAP. 1UF/50V M H7	1
C334			ALUMINUM ELECTROLYTIC CAP 1UF/ 50V H7	1
C335			ELECTROLYTIC CAP. 100UF/6.3V H7	1
C335			ALUMINUM ELECTROLYTIC CAP 100UF/6.3V H7	1
C336			CHIP CERAMIC CAP. CH J 220PF/50V	1

ELECTRICAL PARTS LIST

Pos.No.	⚠	12 NC	Description	VCR Module
C337			CHIP CERAMIC CAP.(1608) F Z 0.1UF/ 50V	1
C337			CHIP CERAMIC CAP.(1608) F Z 0.1UF/ 25V	1
C339			CHIP CERAMIC CAP. CH J 120PF/50V	1
C340			ELECTROLYTIC CAP. 1UF/50V M H7	1
C340			ALUMINUM ELECTROLYTIC CAP 1UF/ 50V H7	1
C341			CHIP CERAMIC CAP.(1608) CH D 10PF/ 50V	1
C342			CHIP CERAMIC CAP.(1608) CH J 1000PF/50V	1
C342			CHIP CERAMIC CAP. CH J 1000PF/25V	1
C343			ELECTROLYTIC CAP. 10UF/16V M H7	1
C343			ALUMINUM ELECTROLYTIC CAP 10UF/16V H7	1
C344			ELECTROLYTIC CAP. 4.7UF/25V M NP H7	1
C345			ELECTROLYTIC CAP. 0.47UF/50V M H7	1
C345			ALUMINUM ELECTROLYTIC CAP 0.47UF/50V H7	1
C348			CERAMIC CAP.(AX) F Z 0.1UF/50V	1
C349			ELECTROLYTIC CAP. 0.47UF/50V M H7	1
C349			ALUMINUM ELECTROLYTIC CAP 0.47UF/50V H7	1
C350			CERAMIC CAP.(AX) F Z 0.1UF/50V	1
C370			CERAMIC CAP.(AX) Y M 0.01UF/16V	1
C371			CHIP CERAMIC CAP.(1608) B K 0.022UF/50V	1
C371			CHIP CERAMIC CAP.(1608) B K 0.022UF/25V	1
C372			CHIP CERAMIC CAP.(1608) F Z 0.1UF/ 50V	1
C372			CHIP CERAMIC CAP.(1608) F Z 0.1UF/ 25V	1
C373			CHIP CERAMIC CAP.(1608) F Z 0.1UF/ 50V	1
C373			CHIP CERAMIC CAP.(1608) F Z 0.1UF/ 25V	1
C374			CHIP CERAMIC CAP.(1608) F Z 0.1UF/ 50V	1
C374			CHIP CERAMIC CAP.(1608) F Z 0.1UF/ 25V	1
C375			CHIP CERAMIC CAP.(1608) B K 0.01UF/ 50V	1
C376			CHIP CERAMIC CAP.(1608) B K 0.022UF/50V	1
C376			CHIP CERAMIC CAP.(1608) B K 0.022UF/25V	1
C377			CHIP CERAMIC CAP.(1608) B K 0.01UF/ 50V	1
C378			CHIP CERAMIC CAP.(1608) B K 0.01UF/ 50V	1
C379			ELECTROLYTIC CAP. 0.47UF/50V M H7	1
C379			ALUMINUM ELECTROLYTIC CAP 0.47UF/50V H7	1
C381			CHIP CERAMIC CAP.(1608) F Z 0.1UF/ 50V	1
C381			CHIP CERAMIC CAP.(1608) F Z 0.1UF/ 25V	1
C382			CHIP CERAMIC CAP. B K 2200PF/50V	1
C383			CHIP CERAMIC CAP. B K 2200PF/50V	1
C384			ELECTROLYTIC CAP. 2.2UF/50V M H7	1
C384			ALUMINUM ELECTROLYTIC CAP 2.2UF/50V H7	1
C402			FILM CAP.(P) 0.018UF/50V J	1
C402			FILM CAP.(P) 0.018UF/50V J	1
C403			CERAMIC CAP. B K 470PF/100V	1
C404			ELECTROLYTIC CAP. 220UF/6.3V M H7	1
C404			ELECTROLYTIC CAP. 220UF/6.3V M H7	1
C405			ELECTROLYTIC CAP. 47UF/6.3V M H7	1
C405			ALUMINUM ELECTROLYTIC CAP 47UF/6.3V H7	1
C407			CHIP CERAMIC CAP. B K 820PF/50V	1

ELECTRICAL PARTS LIST

Pos.No.	⚠	12 NC	Description	VCR Module
C408			CHIP CERAMIC CAP. B K 1800PF/50V	1
C409			CHIP CERAMIC CAP.(1608) CH J 33PF/ 50V	1
C410			ELECTROLYTIC CAP. 10UF/16V M H7	1
C410			ALUMINUM ELECTROLYTIC CAP 10UF/16V H7	1
C411			CHIP CERAMIC CAP.(1608) B K 0.01UF/ 50V	1
C412			ELECTROLYTIC CAP. 33UF/6.3V M H7	1
C412			ALUMINUM ELECTROLYTIC CAP 33UF/6.3V H7	1
C413			CHIP CERAMIC CAP.(1608) F Z 0.1UF/ 50V	1
C413			CHIP CERAMIC CAP.(1608) F Z 0.1UF/ 25V	1
C414			CHIP CERAMIC CAP.(1608) B K 0.01UF/ 50V	1
C415			ELECTROLYTIC CAP. 4.7UF/25V M H7	1
C415			ALUMINUM ELECTROLYTIC CAP 4.7UF/25V H7	1
C416			CHIP CERAMIC CAP.(1608) B K 4700PF/50V	1
C417			ELECTROLYTIC CAP. 22UF/6.3V M H7	1
C417			ALUMINUM ELECTROLYTIC CAP 22UF/6.3V H7	1
C418			CHIP CERAMIC CAP.(1608) F Z 0.1UF/ 50V	1
C418			CHIP CERAMIC CAP.(1608) F Z 0.1UF/ 25V	1
C419			CHIP CERAMIC CAP. CH J 220PF/50V	1
C420			CHIP CERAMIC CAP.(1608) B K 0.01UF/ 50V	1
C421			ELECTROLYTIC CAP. 47UF/6.3V M H7	1
C421			ALUMINUM ELECTROLYTIC CAP 47UF/6.3V H7	1
C422			ELECTROLYTIC CAP. 47UF/6.3V M NP H7	1
C423			ELECTROLYTIC CAP. 47UF/6.3V M NP H7	1
C426			CHIP CERAMIC CAP.(1608) CH J 470PF/50V	1
C427			CHIP CERAMIC CAP.(1608) CH J 470PF/50V	1
C452			ELECTROLYTIC CAP. 10UF/16V M H7	1
C452			ALUMINUM ELECTROLYTIC CAP 10UF/16V H7	1
C453			ELECTROLYTIC CAP. 22UF/10V M H7	1
C453			ALUMINUM ELECTROLYTIC CAP 22UF/10V H7	1
C454			CHIP CERAMIC CAP.(1608) F Z 0.1UF/ 50V	1
C454			CHIP CERAMIC CAP.(1608) F Z 0.1UF/ 25V	1
C455			CHIP CERAMIC CAP.(1608) F Z 0.1UF/ 50V	1
C455			CHIP CERAMIC CAP.(1608) F Z 0.1UF/ 25V	1
C456			ELECTROLYTIC CAP. 10UF/16V M H7	1
C456			ALUMINUM ELECTROLYTIC CAP 10UF/16V H7	1
C457			ELECTROLYTIC CAP. 4.7UF/25V M H7	1
C457			ALUMINUM ELECTROLYTIC CAP 4.7UF/25V H7	1
C458			CHIP CERAMIC CAP.(1608) B K 0.01UF/ 50V	1
C461			CHIP CERAMIC CAP.(1608) B K 0.01UF/ 50V	1
C462			CHIP CERAMIC CAP.(1608) B K 4700PF/50V	1
C463			ELECTROLYTIC CAP. 22UF/10V M H7	1
C463			ALUMINUM ELECTROLYTIC CAP 22UF/10V H7	1
C464			CHIP CERAMIC CAP.(1608) B K 0.01UF/ 50V	1
C465			ELECTROLYTIC CAP. 10UF/16V M H7	1

ELECTRICAL PARTS LIST

Pos.No.	⚠	12 NC	Description	VCR Module
C465			ALUMINUM ELECTROLYTIC CAP 10UF/16V H7	1
C466			CHIP CERAMIC CAP.(1608) F Z 0.1UF/ 50V	1
C466			CHIP CERAMIC CAP.(1608) F Z 0.1UF/ 25V	1
C467			CHIP CERAMIC CAP.(1608) F Z 0.1UF/ 50V	1
C467			CHIP CERAMIC CAP.(1608) F Z 0.1UF/ 25V	1
C468			ELECTROLYTIC CAP. 220UF/6.3V M H7	1
C468			ALUMINUM ELECTROLYTIC CAP 220UF/6.3V H7	1
C469			ELECTROLYTIC CAP. 22UF/10V M H7	1
C469			ALUMINUM ELECTROLYTIC CAP 22UF/10V H7	1
C470			CHIP CERAMIC CAP.(1608) B K 4700PF/50V	1
C471			CHIP CERAMIC CAP.(1608) B K 0.01UF/ 50V	1
C472			ELECTROLYTIC CAP. 4.7UF/25V M H7	1
C472			ALUMINUM ELECTROLYTIC CAP 4.7UF/25V H7	1
C473			ELECTROLYTIC CAP. 10UF/16V M H7	1
C473			ALUMINUM ELECTROLYTIC CAP 10UF/16V H7	1
C474			CHIP CERAMIC CAP.(1608) F Z 0.1UF/ 50V	1
C474			CHIP CERAMIC CAP.(1608) F Z 0.1UF/ 25V	1
C475			CHIP CERAMIC CAP.(1608) F Z 0.1UF/ 50V	1
C475			CHIP CERAMIC CAP.(1608) F Z 0.1UF/ 25V	1
C476			ELECTROLYTIC CAP. 22UF/6.3V M H7	1
C476			ALUMINUM ELECTROLYTIC CAP 22UF/6.3V H7	1
C478			CHIP CERAMIC CAP.(1608) F Z 0.1UF/ 50V	1
C478			CHIP CERAMIC CAP.(1608) F Z 0.1UF/ 25V	1
C479			ELECTROLYTIC CAP. 10UF/16V M H7	1
C479			ALUMINUM ELECTROLYTIC CAP 10UF/16V H7	1
C482			CHIP CERAMIC CAP.(1608) F Z 0.1UF/ 50V	1
C482			CHIP CERAMIC CAP.(1608) F Z 0.1UF/ 25V	1
C483			ELECTROLYTIC CAP. 4.7UF/25V M H7	1
C483			ALUMINUM ELECTROLYTIC CAP 4.7UF/25V H7	1
C484			ELECTROLYTIC CAP. 4.7UF/25V M H7	1
C484			ALUMINUM ELECTROLYTIC CAP 4.7UF/25V H7	1
C485			ELECTROLYTIC CAP. 10UF/16V M H7	1
C485			ALUMINUM ELECTROLYTIC CAP 10UF/16V H7	1
C486			CHIP CERAMIC CAP.(1608) F Z 0.1UF/ 50V	1
C486			CHIP CERAMIC CAP.(1608) F Z 0.1UF/ 25V	1
C487			ELECTROLYTIC CAP. 47UF/16V M H7	1
C487			ALUMINUM ELECTROLYTIC CAP 47UF/16V H7	1
C489			CHIP CERAMIC CAP. B K 2200PF/50V	1
C502			CHIP CERAMIC CAP.(1608) B K 0.022UF/50V	1
C502			CHIP CERAMIC CAP.(1608) B K 0.022UF/25V	1
C505			CHIP CERAMIC CAP.(1608) B K 0.01UF/ 50V	1
C506			ELECTROLYTIC CAP. 220UF/6.3V M	1
C506			ELECTROLYTIC CAP. 220UF/6.3V M	1
C508			CERAMIC CAP.(AX) F Z 0.1UF/50V	1

ELECTRICAL PARTS LIST

Pos.No.	⚠	12 NC	Description	VCR Module
C509			CHIP CERAMIC CAP.(1608) B K 1000PF/50V	1
C510			CHIP CERAMIC CAP.(1608) B K 4700PF/50V	1
C511			CHIP CERAMIC CAP.(1608) CH J 100PF/50V	1
C512			CHIP CERAMIC CAP.(1608) F Z 0.1UF/ 50V	1
C512			CHIP CERAMIC CAP.(1608) F Z 0.1UF/ 25V	1
C514			CHIP CERAMIC CAP. CH J 330PF/50V	1
C515			CHIP CERAMIC CAP.(1608) F Z 0.1UF/ 50V	1
C515			CHIP CERAMIC CAP.(1608) F Z 0.1UF/ 25V	1
C516			ELECTROLYTIC CAP. 22UF/6.3V M H7	1
C516			ALUMINUM ELECTROLYTIC CAP 22UF/6.3V H7	1
C517			CERAMIC CAP.(AX) F Z 0.022UF/25V	1
C518			ELECTROLYTIC CAP. 22UF/6.3V M H7	1
C518			ALUMINUM ELECTROLYTIC CAP 22UF/6.3V H7	1
C519			CHIP CERAMIC CAP. CH J 560PF/50V	1
C521			ELECTROLYTIC CAP. 22UF/6.3V M H7	1
C521			ALUMINUM ELECTROLYTIC CAP 22UF/6.3V H7	1
C522			CHIP CERAMIC CAP.(1608) B K 0.01UF/ 50V	1
C524			CHIP CERAMIC CAP.(1608) B K 0.01UF/ 50V	1
C527			CERAMIC CAP.(AX) B K 100PF/50V	1
C531			CHIP CERAMIC CAP.(1608) B K 4700PF/50V	1
C533			CHIP CERAMIC CAP.(1608) B K 0.047UF/50V	1
C533			CHIP CERAMIC CAP.(1608) B K 0.047UF/25V	1
C534			ELECTROLYTIC CAP. 47UF/6.3V M H7	1
C534			ALUMINUM ELECTROLYTIC CAP 47UF/6.3V H7	1
C535			CHIP CERAMIC CAP.(1608) F Z 0.1UF/ 50V	1
C535			CHIP CERAMIC CAP.(1608) F Z 0.1UF/ 25V	1
C536			CHIP CERAMIC CAP. CH J 560PF/50V	1
C538			CHIP CERAMIC CAP. CH J 180PF/50V	1
C539			CHIP CERAMIC CAP.(1608) B K 0.01UF/ 50V	1
C540			CHIP CERAMIC CAP.(1608) B K 4700PF/50V	1
C541			CHIP CERAMIC CAP. CH J 18PF/50V	1
C542			CHIP CERAMIC CAP. CH J 18PF/50V	1
C545			CHIP CERAMIC CAP.(1608) CH J 22PF/ 50V	1
C546			CHIP CERAMIC CAP.(1608) CH J 22PF/ 50V	1
C547			CHIP CERAMIC CAP.(1608) B K 0.01UF/ 50V	1
C548			CHIP CERAMIC CAP.(1608) F Z 0.1UF/ 50V	1
C548			CHIP CERAMIC CAP.(1608) F Z 0.1UF/ 25V	1
C549			ELECTROLYTIC CAP. 1UF/50V M H7	1
C549			ALUMINUM ELECTROLYTIC CAP 1UF/ 50V H7	1
C550			ELECTROLYTIC CAP. 100UF/6.3V H7	1
C550			ALUMINUM ELECTROLYTIC CAP 100UF/6.3V H7	1
C553			ELECTROLYTIC CAP. 22UF/10V M H7	1
C553			ALUMINUM ELECTROLYTIC CAP 22UF/10V H7	1
C555			CHIP CERAMIC CAP.(1608) F Z 0.1UF/ 50V	1

ELECTRICAL PARTS LIST

Pos.No.	⚠	12 NC	Description	VCR Module
C555			CHIP CERAMIC CAP.(1608) F Z 0.1UF/ 25V	1
C557			CHIP CERAMIC CAP.(1608) CH J 100PF/50V	1
C559			CHIP CERAMIC CAP.(1608) CH J 470PF/50V	1
C560			CHIP CERAMIC CAP.(1608) CH J 470PF/50V	1
C561			CHIP CERAMIC CAP.(1608) CH J 470PF/50V	1
C562			CHIP CERAMIC CAP.(1608) CH J 470PF/50V	1
CONNECTORS				
CN252			PH CONNECTOR (WHITE) TOP 10P B10B-PH-K-S(LF)	1
CN253			FE CONNECTOR TOP 10P 10FE-BT-VK-N	1
CN505			FE CONNECTOR TOP 8P 08FE-BT-VK-N	1
CN653			PH CONNECTOR (WHITE) TOP 2P B2B-PH-K-S(LF)	1
DIODES				
D151			ZENER DIODE DZ-10BSBT265	1
D151			ZENER DIODE MTZJT-7710B	1
D301			SWITCHING DIODE 1N4148M	1
D301			SWITCHING DIODE 1SS133(T-77)	1
D370			SWITCHING DIODE 1N4148M	1
D370			SWITCHING DIODE 1SS133(T-77)	1
D510			SWITCHING DIODE 1N4148M	1
D510			SWITCHING DIODE 1SS133(T-77)	1
D555			LED MIE-534A2	1
D555			LED SIR-563ST3F P	1
D555			LED SIR-563ST3F Q	1
ICS				
IC301			IC Y/C/A LA71750EM-MPB-E	1
IC370			IC SECAM LA70100M-TRM-E	1
IC451			IC HIFI LA72648M-MPB-E	1
IC501			SYSCONIC M3776AMCH-AD1GP	1
IC502			IC BR24L02F-WE2	1
IC502			IC CAT24WC02WI-TE13	1
COILS				
L151			INDUCTOR 100UH-J-5FT	1
L251			INDUCTOR 5.6UH-K-26T	1
L302			INDUCTOR(100UH K) LAP02TA101K	1
L370			PCB JUMPER D0.6-P5.0	1
L401			PCB JUMPER D0.6-P5.0	1
L402			INDUCTOR 47UH-K-5FT	1
L451			INDUCTOR 47UH-K-5FT	1
L452			INDUCTOR 27UH-K-5FT	1
L501			INDUCTOR(100UH K) LAP02TA101K	1
L502			PCB JUMPER D0.6-P5.0	1
L503			INDUCTOR 1.8UH-K-26T	1
TRANSISTORS				
Q151			TRANSISTOR KTC3198-Y-AT/P	1
Q151			TRANSISTOR KTC3198-GR-AT/P	1
Q152			NPN TRANSISTOR KRC103M-AT/P	1
Q153			TRANSISTOR KTC3205-Y-AT/P	1
Q153			TRANSISTOR 2SC3266-Y(TPE2 F)	1
Q301			TRANSISTOR KTA-1266-GR-AT/P	1
Q301			TRANSISTOR 2SA1015-GR(TE2 F T)	1
Q302			TRANSISTOR KTC3199-Y-AT/P	1
Q302			TRANSISTOR KTC3199-GR-AT/P	1
Q302			TRANSISTOR 2SC1815-Y(TE2 F T)	1
Q302			TRANSISTOR 2SC1815-GR(TE2 F T)	1
Q401			CHIP TRANSISTOR RN1511(TE85R.F)	1
Q403			TRANSISTOR KTC3203-Y-AT/P	1
Q403			TRANSISTOR 2SC2120-Y(TE2 F T)	1
Q404			TRANSISTOR KTA-1266-GR-AT/P	1
Q404			TRANSISTOR 2SA1015-GR(TE2 F T)	1

ELECTRICAL PARTS LIST

Pos.No.	⚠	12 NC	Description	VCR Module
Q405			RES. BUILT-IN TRANSISTOR KRA103M-AT/P	1
Q406			CHIP TRANSISTOR KTC3875S-Y-RTK/ P	1
Q451			TRANSISTOR KRC103S-RTK/P	1
Q506			PHOTO TRANSISTOR PT204-6B-12	1
Q506			PHOTO TRANSISTOR MID-32A22F	1
Q515			TRANSISTOR KTC3199-BL-AT/P	1
Q515			TRANSISTOR 2SC1815-BL(TE2 F T)	1
RESISTORS				
R151			CARBON RES. 1/4W J 10K OHM	1
R152			CHIP RES. 1/10W J 1K OHM	1
R152			RES CHIP 1608 1/10W J 1.0K OHM	1
R153			CARBON RES. 1/4W J 150 OHM	1
R251			CHIP RES. 1/10W J 39K OHM	1
R251			RES CHIP 1608 1/10W J 39K OHM	1
R252			CHIP RES. 1/10W J 2.2K OHM	1
R252			RES CHIP 1608 1/10W J 2.2K OHM	1
R301			CHIP RES. 1/10W J 1.2K OHM	1
R301			RES CHIP 1608 1/10W J 1.2K OHM	1
R303			CHIP RES. 1/10W J 8.2K OHM	1
R303			RES CHIP 1608 1/10W J 8.2K OHM	1
R305			CHIP RES. 1/10W J 10K OHM	1
R305			RES CHIP 1608 1/10W J 10K OHM	1
R308			CHIP RES. 1/10W J 3.9K OHM	1
R308			RES CHIP 1608 1/10W J 3.9K OHM	1
R309			CARBON RES. 1/6W J 100 OHM	1
R309			CARBON RES. 1/4W J 100 OHM	1
R310			PCB JUMPER D0.6-P5.0	1
R312			CHIP RES. 1/10W J 5.6K OHM	1
R312			RES CHIP 1608 1/10W J 5.6K OHM	1
R314			CHIP RES. 1/10W J 3.9K OHM	1
R314			RES CHIP 1608 1/10W J 3.9K OHM	1
R316			CHIP RES. 1/10W J 1.8K OHM	1
R316			RES CHIP 1608 1/10W J 1.8K OHM	1
R317			CHIP RES. 1/10W J 220 OHM	1
R317			RES CHIP 1608 1/10W J 220 OHM	1
R318			CARBON RES. 1/4W J 680 OHM	1
R319			CHIP RES. 1/10W J 1K OHM	1
R319			RES CHIP 1608 1/10W J 1.0K OHM	1
R320			CHIP RES. 1/10W J 47K OHM	1
R320			RES CHIP 1608 1/10W J 47K OHM	1
R321			CARBON RES. 1/6W J 82 OHM	1
R321			CARBON RES. 1/4W J 82 OHM	1
R322			CHIP RES. 1/10W J 10K OHM	1
R322			RES CHIP 1608 1/10W J 10K OHM	1
R325			CHIP RES. 1/10W J 1.2K OHM	1
R325			RES CHIP 1608 1/10W J 1.2K OHM	1
R326			CHIP RES. 1/10W J 4.7K OHM	1
R326			RES CHIP 1608 1/10W J 4.7K OHM	1
R327			CHIP RES. 1/10W J 6.8K OHM	1
R327			RES CHIP 1608 1/10W J 6.8K OHM	1
R328			CHIP RES. 1/10W J 1K OHM	1
R328			RES CHIP 1608 1/10W J 1.0K OHM	1
R330			CHIP RES. 1/10W J 2.2K OHM	1
R330			RES CHIP 1608 1/10W J 2.2K OHM	1
R331			CHIP RES. 1/10W J 18K OHM	1
R331			RES CHIP 1608 1/10W J 18K OHM	1
R332			CHIP RES. 1/10W J 10K OHM	1
R332			RES CHIP 1608 1/10W J 10K OHM	1
R333			CHIP RES. 1/10W J 18K OHM	1
R333			RES CHIP 1608 1/10W J 18K OHM	1
R334			CHIP RES. 1/10W J 10K OHM	1
R334			RES CHIP 1608 1/10W J 10K OHM	1
R336			CHIP RES. 1/10W J 4.7K OHM	1
R336			RES CHIP 1608 1/10W J 4.7K OHM	1
R337			CHIP RES. 1/10W J 6.8K OHM	1
R337			RES CHIP 1608 1/10W J 6.8K OHM	1
R370			CHIP RES. 1/10W J 2.7K OHM	1

ELECTRICAL PARTS LIST

Pos.No.	⚠	12 NC	Description	VCR Module
R370			RES CHIP 1608 1/10W J 2.7K OHM	1
R371			CARBON RES. 1/6W J 5.6K OHM	1
R371			CARBON RES. 1/4W J 5.6K OHM	1
R372			CHIP RES. 1/10W J 3.9K OHM	1
R372			RES CHIP 1608 1/10W J 3.9K OHM	1
R401			CARBON RES. 1/6W J 820 OHM	1
R401			CARBON RES. 1/4W J 820 OHM	1
R402			CARBON RES. 1/6W J 100 OHM	1
R402			CARBON RES. 1/4W J 100 OHM	1
R404			CHIP RES.(1608) 1/10W 0 OHM	1
R404			RES CHIP 1608 1/10W J 0 OHM	1
R405			CHIP RES. 1/10W J 47K OHM	1
R405			RES CHIP 1608 1/10W J 47K OHM	1
R406			CHIP RES. 1/10W J 22K OHM	1
R406			RES CHIP 1608 1/10W J 22K OHM	1
R407			CHIP RES. 1/10W J 5.6K OHM	1
R407			RES CHIP 1608 1/10W J 5.6K OHM	1
R408			CHIP RES. 1/10W J 12K OHM	1
R408			RES CHIP 1608 1/10W J 12K OHM	1
R409			CHIP RES. 1/10W J 5.6K OHM	1
R409			RES CHIP 1608 1/10W J 5.6K OHM	1
R410			CHIP RES. 1/10W J 1K OHM	1
R410			RES CHIP 1608 1/10W J 1.0K OHM	1
R411			CHIP RES. 1/10W J 27K OHM	1
R411			RES CHIP 1608 1/10W J 27K OHM	1
R412			CHIP RES. 1/10W J 120 OHM	1
R412			RES CHIP 1608 1/10W J 120 OHM	1
R413			CHIP RES. 1/10W J 330K OHM	1
R413			RES CHIP 1608 1/10W J 330K OHM	1
R414			CHIP RES. 1/10W J 12K OHM	1
R414			RES CHIP 1608 1/10W J 12K OHM	1
R415			CHIP RES. 1/10W J 1.8K OHM	1
R415			RES CHIP 1608 1/10W J 1.8K OHM	1
R416			CHIP RES. 1/10W J 1.2K OHM	1
R416			RES CHIP 1608 1/10W J 1.2K OHM	1
R417			CHIP RES. 1/10W J 2.2K OHM	1
R417			RES CHIP 1608 1/10W J 2.2K OHM	1
R418			CHIP RES. 1/10W J 12K OHM	1
R418			RES CHIP 1608 1/10W J 12K OHM	1
R419			CHIP RES. 1/10W J 10K OHM	1
R419			RES CHIP 1608 1/10W J 10K OHM	1
R420			CHIP RES. 1/10W J 5.6K OHM	1
R420			RES CHIP 1608 1/10W J 5.6K OHM	1
R421			CHIP RES. 1/10W J 4.7K OHM	1
R421			RES CHIP 1608 1/10W J 4.7K OHM	1
R453			CHIP RES. 1/10W J 5.6K OHM	1
R453			RES CHIP 1608 1/10W J 5.6K OHM	1
R454			CHIP RES. 1/10W J 39K OHM	1
R454			RES CHIP 1608 1/10W J 39K OHM	1
R462			CHIP RES. 1/10W J 10K OHM	1
R462			RES CHIP 1608 1/10W J 10K OHM	1
R463			CHIP RES. 1/10W J 470 OHM	1
R463			RES CHIP 1608 1/10W J 470 OHM	1
R464			CHIP RES. 1/10W J 3.3K OHM	1
R464			RES CHIP 1608 1/10W J 3.3K OHM	1
R466			CHIP RES. 1/10W J 8.2K OHM	1
R466			RES CHIP 1608 1/10W J 8.2K OHM	1
R467			CHIP RES. 1/10W J 5.6K OHM	1
R467			RES CHIP 1608 1/10W J 5.6K OHM	1
R470			CHIP RES. 1/10W J 39K OHM	1
R470			RES CHIP 1608 1/10W J 39K OHM	1
R479			CHIP RES. 1/10W J 33 OHM	1
R479			RES CHIP 1608 1/10W J 33 OHM	1
R480			CHIP RES. 1/10W J 100 OHM	1
R480			RES CHIP 1608 1/10W J 100 OHM	1
R481			CHIP RES. 1/10W J 33 OHM	1
R481			RES CHIP 1608 1/10W J 33 OHM	1
R482			CARBON RES. 1/6W J 100 OHM	1

ELECTRICAL PARTS LIST

Pos.No.	⚠	12 NC	Description	VCR Module
R482			CARBON RES. 1/4W J 100 OHM	1
R483			CHIP RES. 1/10W J 22K OHM	1
R483			RES CHIP 1608 1/10W J 22K OHM	1
R484			CHIP RES. 1/10W J 6.8K OHM	1
R484			RES CHIP 1608 1/10W J 6.8K OHM	1
R509			CHIP RES. 1/10W J 180 OHM	1
R509			RES CHIP 1608 1/10W J 180 OHM	1
R511			CARBON RES. 1/6W G 3.6K OHM	1
R511			CARBON RES. 1/4W G 3.6K OHM	1
R512			CHIP RES. 1/10W J 68K OHM	1
R512			RES CHIP 1608 1/10W J 68K OHM	1
R513			CHIP RES. 1/10W J 33K OHM	1
R513			RES CHIP 1608 1/10W J 33K OHM	1
R514			CARBON RES. 1/6W G 10K OHM	1
R514			CARBON RES. 1/4W G 10K OHM	1
R516			CARBON RES. 1/6W G 470 OHM	1
R516			CARBON RES. 1/4W G 470 OHM	1
R517			CARBON RES. 1/4W J 270 OHM	1
R519			CARBON RES. 1/6W G 22K OHM	1
R519			CARBON RES. 1/4W G 22K OHM	1
R523			CARBON RES. 1/6W G 1.5K OHM	1
R523			CARBON RES. 1/4W G 1.5K OHM	1
R525			CARBON RES. 1/6W J 390K OHM	1
R525			CARBON RES. 1/4W J 390K OHM	1
R526			CHIP RES. 1/10W J 390K OHM	1
R526			RES CHIP 1608 1/10W J 390K OHM	1
R528			CARBON RES. 1/6W G 4.7K OHM	1
R528			CARBON RES. 1/4W G 4.7K OHM	1
R530			CHIP RES. 1/10W J 100 OHM	1
R530			RES CHIP 1608 1/10W J 100 OHM	1
R531			CHIP RES. 1/10W J 100 OHM	1
R531			RES CHIP 1608 1/10W J 100 OHM	1
R532			CHIP RES. 1/10W J 100 OHM	1
R532			RES CHIP 1608 1/10W J 100 OHM	1
R533			CHIP RES. 1/10W J 100 OHM	1
R533			RES CHIP 1608 1/10W J 100 OHM	1
R536			CHIP RES. 1/10W J 1.8K OHM	1
R536			RES CHIP 1608 1/10W J 1.8K OHM	1
R537			CHIP RES. 1/10W J 680 OHM	1
R537			RES CHIP 1608 1/10W J 680 OHM	1
R538			CHIP RES. 1/10W J 1.5K OHM	1
R538			RES CHIP 1608 1/10W J 1.5K OHM	1
R539			CHIP RES. 1/10W J 10K OHM	1
R539			RES CHIP 1608 1/10W J 10K OHM	1
R540			CHIP RES. 1/10W J 10K OHM	1
R540			RES CHIP 1608 1/10W J 10K OHM	1
R541			CHIP RES. 1/10W J 18K OHM	1
R541			RES CHIP 1608 1/10W J 18K OHM	1
R542			CHIP RES. 1/10W J 1K OHM	1
R542			RES CHIP 1608 1/10W J 1.0K OHM	1
R543			CARBON RES. 1/6W J 1K OHM	1
R543			CARBON RES. 1/4W J 1K OHM	1
R545			CHIP RES. 1/10W J 10K OHM	1
R545			RES CHIP 1608 1/10W J 10K OHM	1
R546			CARBON RES. 1/6W J 1K OHM	1
R546			CARBON RES. 1/4W J 1K OHM	1
R559			CARBON RES. 1/4W J 10K OHM	1
R560			CHIP RES. 1/10W J 10K OHM	1
R560			RES CHIP 1608 1/10W J 10K OHM	1
R567			CHIP RES. 1/10W J 39K OHM	1
R567			RES CHIP 1608 1/10W J 39K OHM	1
R568			CHIP RES. 1/10W J 220K OHM	1
R568			RES CHIP 1608 1/10W J 220K OHM	1
R569			CHIP RES. 1/10W J 10K OHM	1
R569			RES CHIP 1608 1/10W J 10K OHM	1
R570			CARBON RES. 1/6W J 4.7K OHM	1
R570			CARBON RES. 1/4W J 4.7K OHM	1
R572			CHIP RES. 1/10W J 1K OHM	1

ELECTRICAL PARTS LIST

Pos.No.	⚠	12 NC	Description	VCR Module
R572			RES CHIP 1608 1/10W J 1.0K OHM	1
R574			CHIP RES. 1/10W J 1K OHM	1
R574			RES CHIP 1608 1/10W J 1.0K OHM	1
R577			CHIP RES. 1/10W J 1.5K OHM	1
R577			RES CHIP 1608 1/10W J 1.5K OHM	1
R578			CHIP RES. 1/10W J 1K OHM	1
R578			RES CHIP 1608 1/10W J 1.0K OHM	1
R582			CHIP RES. 1/10W J 100K OHM	1
R582			RES CHIP 1608 1/10W J 100K OHM	1
R583			CHIP RES. 1/10W J 1K OHM	1
R583			RES CHIP 1608 1/10W J 1.0K OHM	1
R585			CHIP RES. 1/10W J 1.2K OHM	1
R585			RES CHIP 1608 1/10W J 1.2K OHM	1
R586			CHIP RES. 1/10W J 1.5K OHM	1
R586			RES CHIP 1608 1/10W J 1.5K OHM	1
R588			CHIP RES. 1/10W J 470 OHM	1
R588			RES CHIP 1608 1/10W J 470 OHM	1
R595			CHIP RES. 1/10W J 10K OHM	1
R595			RES CHIP 1608 1/10W J 10K OHM	1
R596			CHIP RES. 1/10W J 10K OHM	1
R596			RES CHIP 1608 1/10W J 10K OHM	1
R597			CHIP RES. 1/10W J 10K OHM	1
R597			RES CHIP 1608 1/10W J 10K OHM	1
R598			CHIP RES. 1/10W J 100K OHM	1
R598			RES CHIP 1608 1/10W J 100K OHM	1
SWITCHES				
SW506			LEAF SWITCH MXS01830MVP0	1
SW507			ROTARY MODE SWITCH SSS-53MD	1
			SENSOR CBA	
TRANSISTORS				
Q503			PHOTO TRANSISTOR PT204-6B-12	1
Q503			PHOTO TRANSISTOR MID-32A22F	1
Q504			PHOTO TRANSISTOR PT204-6B-12	1
Q504			PHOTO TRANSISTOR MID-32A22F	1

EXPLODED VIEWS

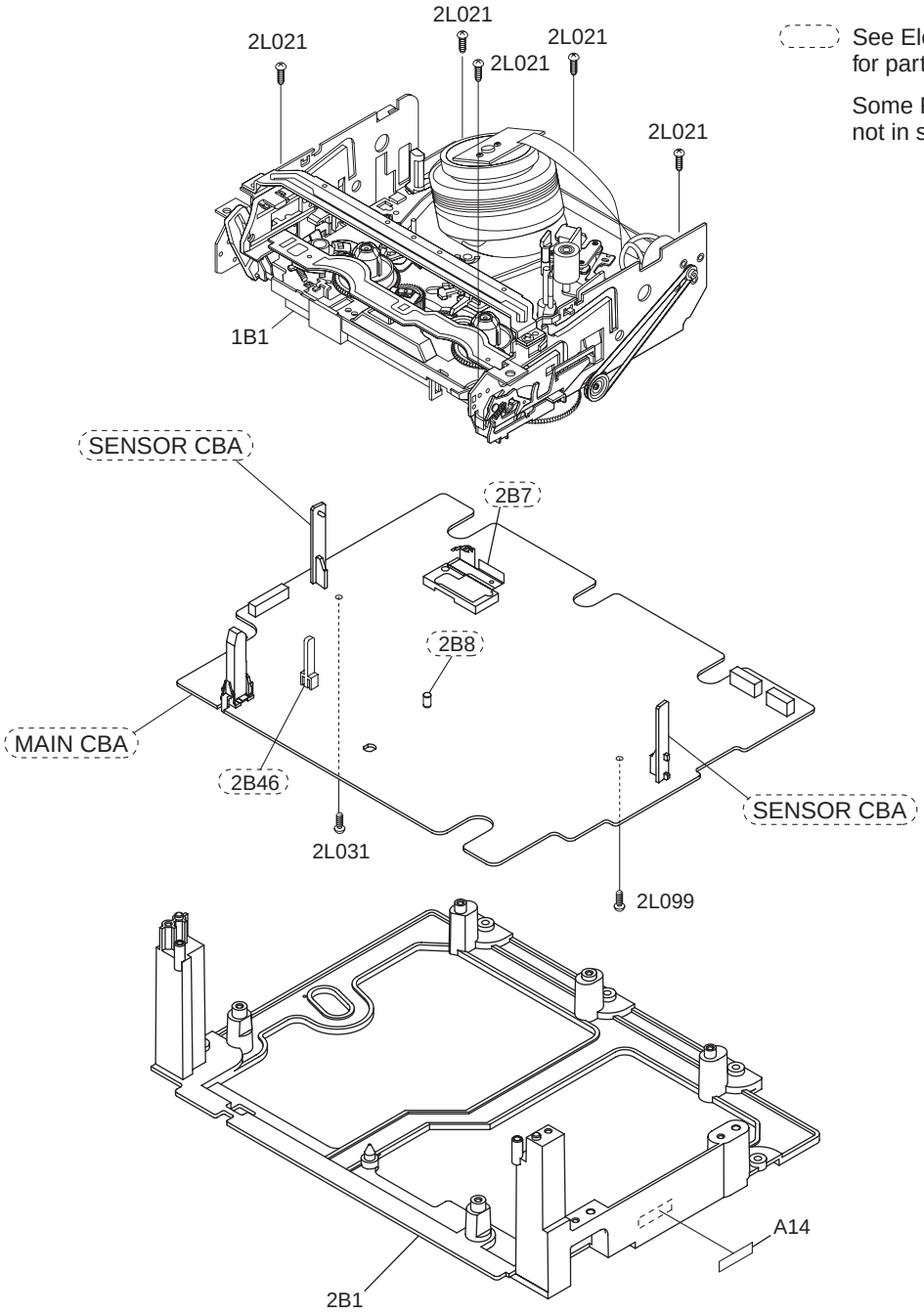

See Electrical Parts List for parts with this mark.

Some Ref. Numbers are not in sequence.

MECHANICAL PARTS LIST

PRODUCT SAFETY NOTE: Products marked with a ⚠ have special characteristics important to safety. Before replacing any of these components, read carefully the product safety notice in this service manual. Don't degrade the safety of the product through improper servicing.

MECHANICAL PARTS LIST				VCR Module
Pos.No.	⚠	**12 NC**	**Description**	
MECHANICAL PARTS LIST				
1B1			DECK ASSEMBLY CZD014/VM25E0	1
2B1			DECK PEDESTAL HK100ED	1
2L021			SCREW P-TIGHT M3*10 WASHER-HEAD+	1
2L031			SCREW S-TIGHT M3X6 BIND HEAD+	1
2L099			SCREW P-TIGHT M3X8 BIND HEAD+	1
PACKING				
S1			DECK CASE (A) HK100ED	1
S2			DECK CASE (B) HK100ED	1
S3			DECK PARTITION (A) HK100ED	1
S4			DECK PARTITION (B) HK100ED	1
S5			DECK PAD HK100ED	1
S6			PALLET HK100ED	1
S7			DECK CASE COVER HK100ED	1
S8			WOODEN PLATE HK100ED	1
S9			POLYETHYLENE PACK HK100ED	1
S10			DECK SPASAR HK100ED	1

DECK MECHANISM SECTION

VCR Module

Sec. 2: Deck Mechanism Section

- **Standard Maintenance**
- **Mechanism Alignment Procedures**
- **Disassembly / Assembly of Mechanism**
- **Deck Exploded Views**
- **Deck Parts List**

TABLE OF CONTENTS

STANDARD MAINTENANCE 2-1-1
SERVICE FIXTURE AND TOOLS 2-2-1
MECHANICAL ALIGNMENT PROCEDURES 2-3-1
DISASSEMBLY / ASSEMBLY PROCEDURES OF DECK MECHANISM 2-4-1
ALIGNMENT PROCEDURES OF MECHANISM 2-5-1
DECK EXPLODED VIEWS 2-6-1
DECK PARTS LIST 2-7-1

STANDARD MAINTENANCE

Service Schedule of Components

This maintenance chart shows you the standard of replacement and cleaning time for each part.
Because those may replace depending on environment and purpose for use, use the chart for reference.

h: Hours ○: Cleaning ●: Replace

Deck		Periodic Service Schedule			
Ref.No.	**Part Name**	**1,000 h**	**2,000 h**	**3,000 h**	**4,000 h**
B2	Cylinder Assembly	○	●	○	●
B3	Loading Motor Assembly			●	
B8	Pulley Assembly		●		●
B587	Tension Lever Assembly		●		●
B31	ACE Head Assembly			●	
B573, B574	Reel S, Reel T			●	
B37	Capstan Motor		●		●
B52	Cap Belt		●		●
B73	FE Head			●	
B86	F Brake Assembly (HI)		●		●
B133	Idler Assembly (HI)		●		●
B410	Pinch Arm Assembly		●		●
B414	M Brake (SP) Assembly (HI)		●		●
B416	M Brake (TU) Assembly (HI)		●		●
B525	LDG Belt		●		●

Notes:

1. Clean all parts for the tape transport (Upper Drum with Video Head / Pinch Roller / ACE Head / FE Head) using 90% ethyl alcohol.
2. After cleaning the parts, do all DECK ADJUSTMENTS.
3. For the reference numbers listed above, refer to Deck Exploded Views.

Cleaning

Cleaning of Video Head

Clean the head with a head cleaning stick or chamois cloth.

Procedure

1. Remove the top cabinet.
2. Put on a glove (thin type) to avoid touching the upper and lower drum with your bare hand.
3. Put a few drops of 90% ethyl alcohol on the head cleaning stick or on the chamois cloth and, by slightly pressing it against the head tip, turn the upper drum to the right and to the left.

Notes:

1. The video head surface is made of very hard material, but since it is very thin, avoid cleaning it vertically.
2. Wait for the cleaned part to dry thoroughly before operating the unit.
3. Do not reuse a stained head cleaning stick or a stained chamois cloth.

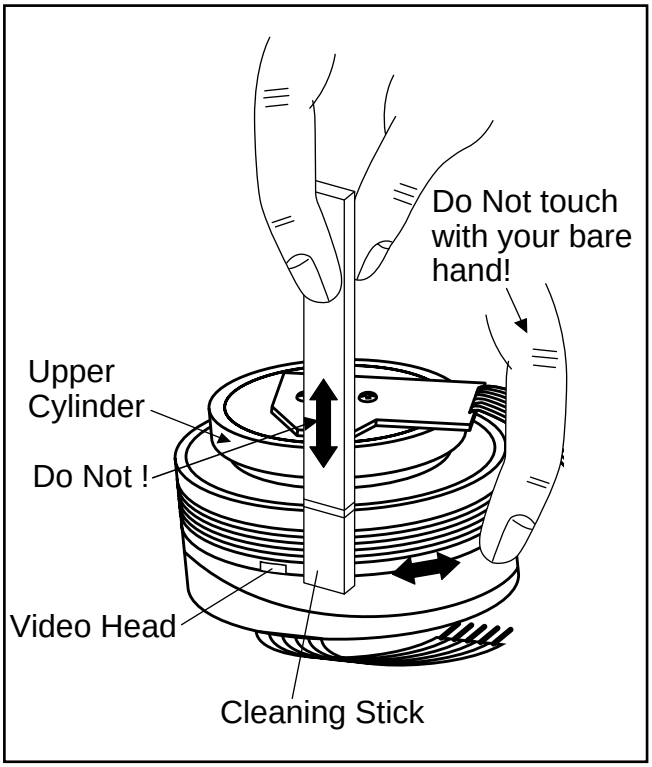

Cleaning of ACE Head

Clean the head with a cotton swab.

Procedure

1. Remove the top cabinet.
2. Dip the cotton swab in 90% ethyl alcohol and clean the ACE Head. Be careful not to damage the upper drum and other tape running parts.

Notes:

1. Avoid cleaning the ACE Head vertically.
2. Wait for the cleaned part to dry thoroughly before operating the unit or damage may occur.

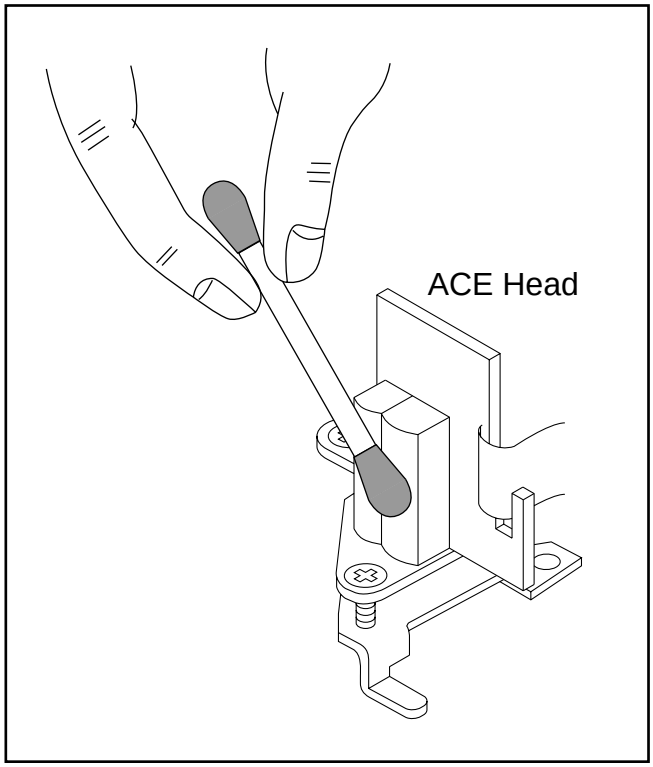

SERVICE FIXTURE AND TOOLS

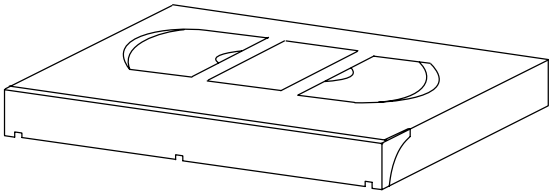

J-1-1, J-1-2

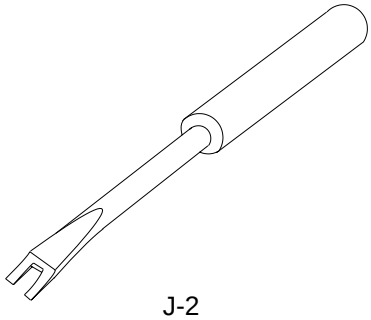

J-2

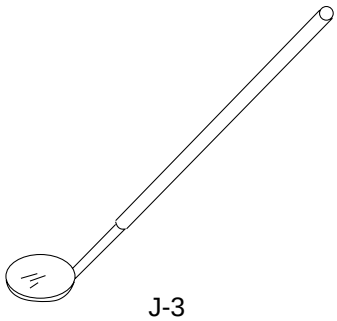

J-3

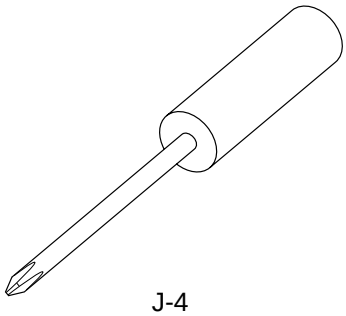

J-4

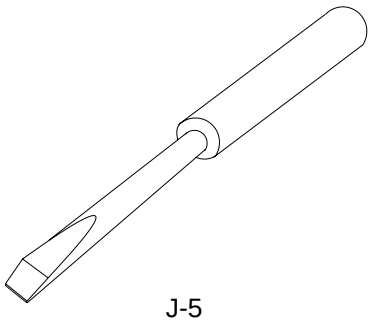

J-5

Ref. No.	Name	Part No.	Adjustment
J-1-1	Alignment Tape	9965 000 14514	Head Adjustment of ACE Head
J-1-2	Alignment Tape	9965 000 14515	Azimuth and X Value Adjustment of ACE Head / Adjustment of Envelope Waveform
J-2	Guide Roller Adj. Screwdriver	Available Locally	Guide Roller
J-3	Mirror	Available Locally	Tape Transportation Check
J-4	Azimuth Adj. Screwdriver +	Available Locally	ACE Head Height
J-5	Flat Screwdriver -	Available Locally	X Value

4-4 MECHANICAL ALIGNMENT PROCEDURES

Explanation of alignment for the tape to correctly run starts on the next page. Refer to the information below on this page if a tape gets stuck, for example, in the mechanism due to some electrical trouble of the unit.

4-4-1 Service Information

A. Method for Manual Tape Loading/Unloading

To load a cassette tape manually:

1. Disconnect the AC plug.
2. Remove the Top Case and Front Assembly.
3. Insert a cassette tape. Though the tape will not be automatically loaded, make sure that the cassette tape is all the way in at the inlet of the Cassette Holder. To confirm this, lightly push the cassette tape further in and see if the tape comes back out, by a spring motion, just as much as you have pushed in.
4. Turn the LDG Belt in the appropriate direction shown in Fig. M1 for a minute or two to complete this task.

To unload a cassette tape manually:

1. Disconnect the AC plug.
2. Remove the Top Case and Front Assembly.
3. Make sure that the Moving guide preparations are in the Eject Position.
4. Turn the LDG Belt in the appropriate direction shown in Fig. M1 until the Moving guide preparations come to the Eject Position. Stop turning when the preparations begin clicking or can not be moved further. However, the tape will be left wound around the cylinder.
5. Turn the LDG Belt in the appropriate direction continuously, and the cassette tape will be ejected. Allow a minute or two to complete this task.

B. Method to place the Cassette Holder in the tape-loaded position without a cassette tape

1. Disconnect the AC Plug.
2. Remove the Top Case and Front Assembly.
3. Turn the LDG Belt in the appropriate direction shown in Fig. M1. (The Cam Gear in Fig. M2 rotates.) Release the locking tabs shown in Fig. M1 and continue turning the LDG Belt until the Cassette Holder comes to the tape-loaded position. Allow a minute or two to complete this task.

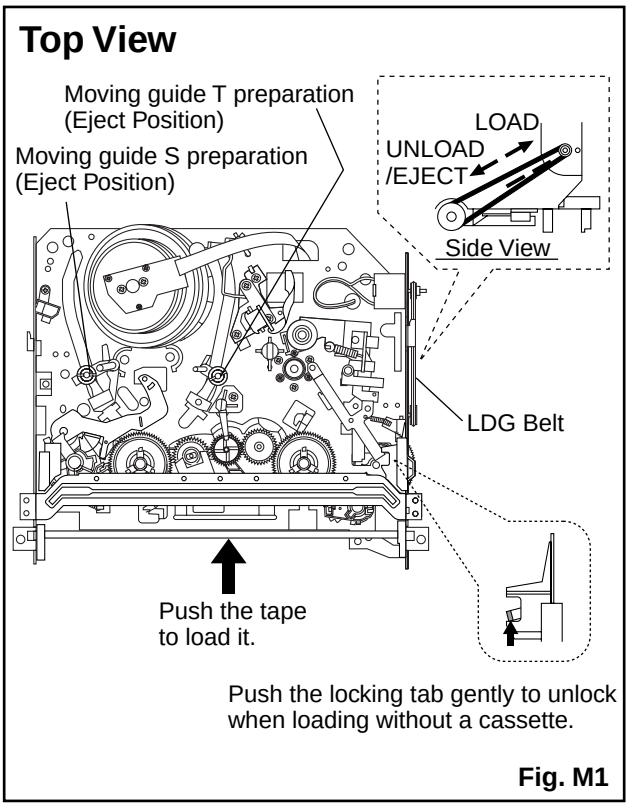

Fig. M1

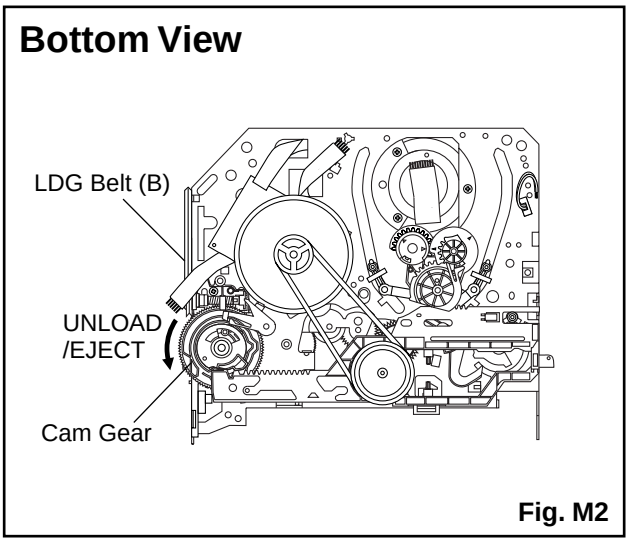

Fig. M2

4-4-2. Tape Interchangeability Alignment

Note:
To do these alignment procedures, make sure that the Tracking Control Circuit is set to the preset position every time a tape is loaded or unloaded. (Refer to page 4-7, procedure 1-C, step 2.)

Equipment required:

Dual Trace Oscilloscope
VHS Alignment Tape (9965 000 14515)
Guide Roller Adj. Screwdriver
Flat Screwdriver (Purchase Locally)

Note: Before starting this Mechanical Alignment, do all Electrical Adjustment procedures.

Flowchart of Alignment for tape traveling

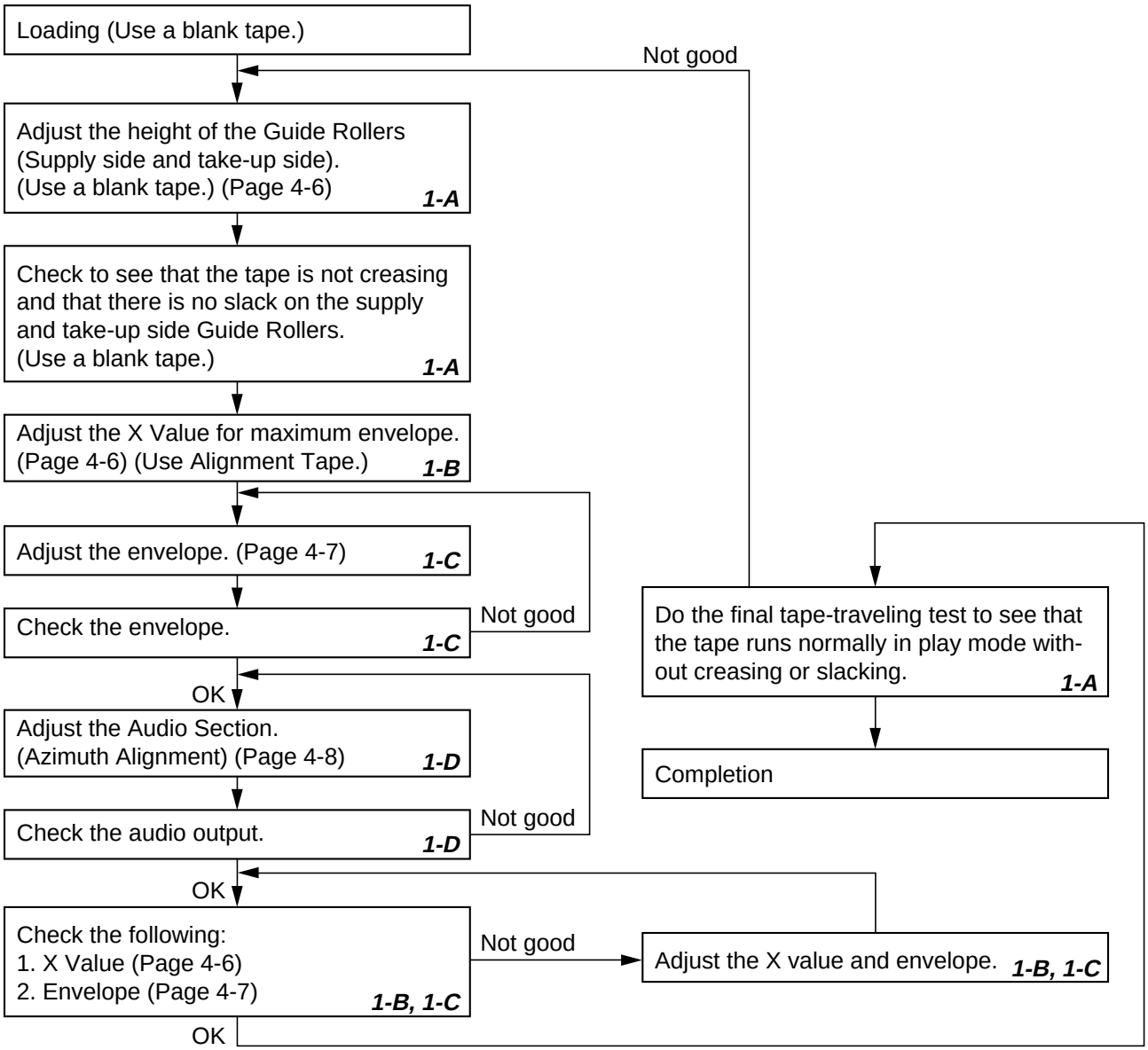

1-A. Preliminary/Final Checking and Alignment of Tape Path

Purpose:

To make sure that the tape path is well stabilized.

Symptom of Misalignment:

If the tape path is unstable, the tape will be damaged.

Note: Do not use an Alignment Tape for this procedure. If the unit is not correctly aligned, the tape may be damaged.

1. Playback a blank cassette tape and check to see that the tape runs without creasing at Guide Rollers [2] and [3], and at points A and B on the lead surface. (Refer to Fig. M3 and M4.)
2. If creasing is apparent, align the height of the guide rollers by turning the top of Guide Rollers [2] and [3] with a Guide Roller Adj. Screwdriver. (Refer to Fig. M3 and M5.)

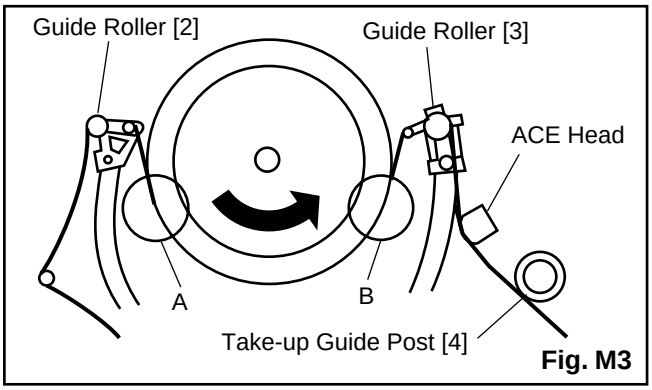

Fig. M3

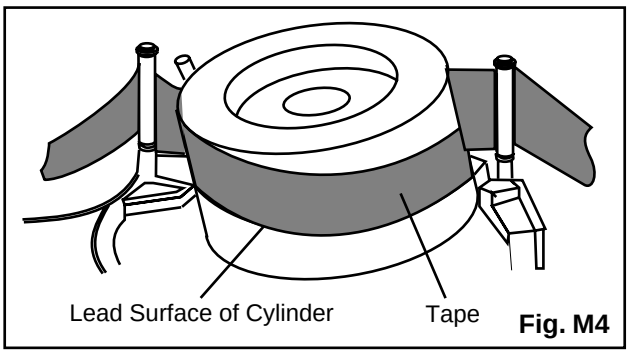

Fig. M4

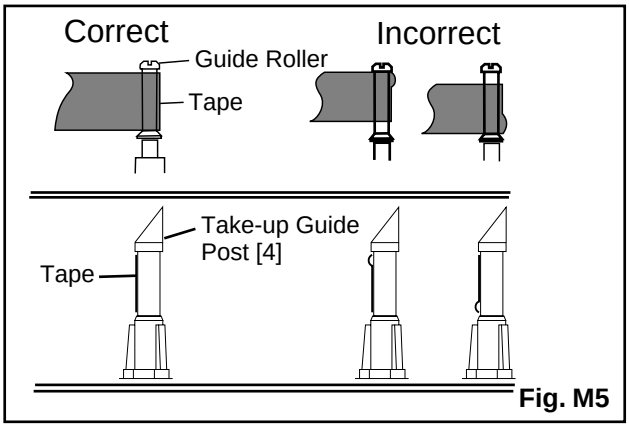

Fig. M5

3. Check to see that the tape runs without creasing at Take-up Guide Post [4] or without snaking between Guide Roller [3] and ACE Head. (Fig. M3 and M5)
4. If creasing or snaking is apparent, adjust the Tilt Adj. Screw of the ACE Head. (Fig. M6)

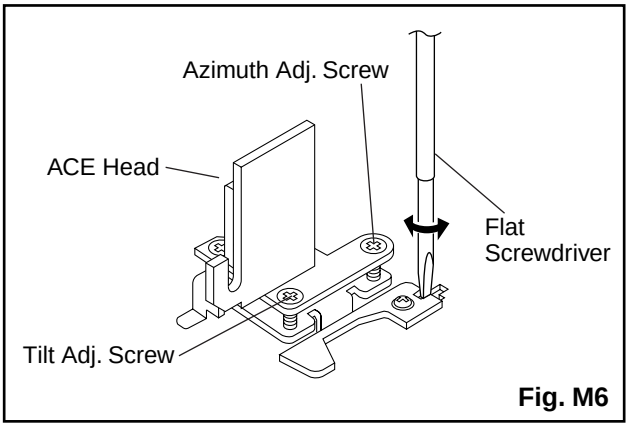

Fig. M6

1-B. X Value Alignment

Purpose:

To obtain maximum PB FM envelope signal at the preset position of the Tracking Control Circuit, align the Horizontal Position of the ACE Head.

Symptom of Misalignment:

If the Horizontal Position of the ACE Head is not properly aligned, maximum PB FM envelope cannot be obtained at the preset position of the Tracking Control Circuit.

1. Connect the oscilloscope to TP301 (C-PB) and TP503 (CTL) on the Main CBA. Use TP504 (RF-SW) as a trigger.
2. Playback the Gray Scale of the Alignment Tape (9965 000 14515) and confirm that the PB FM signal is present.
3. Set the Tracking Control Circuit to the preset position by pressing “CH UP” button and then “VCR-PLAY” button on the unit. (Refer to note on bottom of page 4-7.)
4. Use the Flat Screwdriver so that the PB FM signal at TP301 (C-PB) is maximum. (Fig. M6)

5. To shift the CTL waveform, press “CH UP” or “CH DOWN” button on the remote control unit. Then make sure that the maximum output position of PB FM envelope signal becomes within ±2ms from preset position.

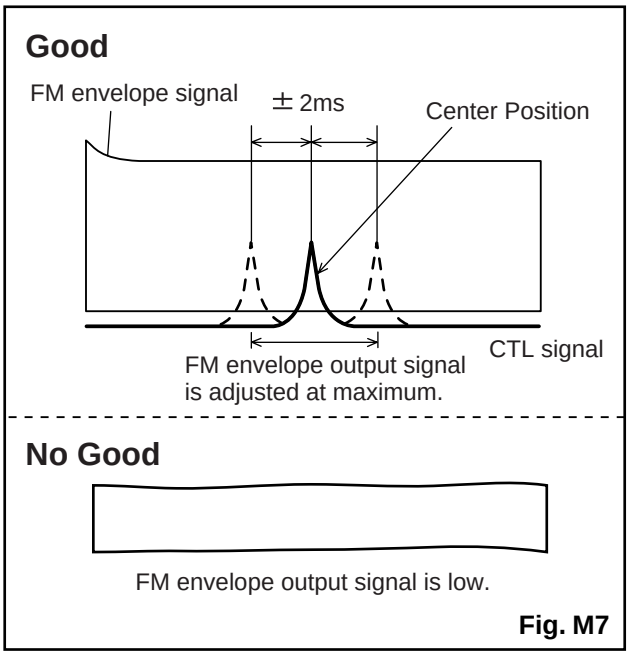

Fig. M7

6. Set the Tracking Control Circuit to the preset position by pressing “CH UP” button and then “VCR-PLAY” button on the unit.

1-C. Checking/Adjustment of Envelope Waveform

Purpose:

To achieve a satisfactory picture, adjust the Guide Rollers so that the PB FM envelope becomes as flat as possible.

Symptom of Misalignment:

If the envelope output is poor, noise will appear in the picture. The tracking will then lose precision and the playback picture will be distorted by any slight variation of the Tracking Control Circuit.

1. Connect the oscilloscope to TP301 (C-PB) on the Main CBA. Use TP504 (RF-SW) as a trigger.
2. Playback the Gray Scale on the Alignment Tape (9965 000 14515). Set the Tracking Control Circuit to the preset position by pressing “CH UP” button and then “VCR-PLAY” button on the unit. Adjust the height of Guide Rollers [2] and [3] (Fig. M3, page 4-6) watching the oscilloscope display so that the envelope becomes as flat as possible. To do this adjustment, turn the top of the Guide Roller with the Guide Roller Adj. Screwdriver.
3. If the envelope is as shown in Fig. M8, adjust the height of Guide Roller [2] (Refer to Fig. M3) so that the waveform looks like the one shown in Fig. M10.
4. If the envelope is as shown in Fig. M9, adjust the height of Guide Roller [3] (Refer to Fig. M3) so that the waveform looks like the one shown in Fig. M10.
5. When Guide Rollers [2] and [3] (Refer to Fig. M3) are aligned properly, there is no envelope drop either at the beginning or end of track as shown in Fig. M10.

Dropping envelope level at the beginning of track.

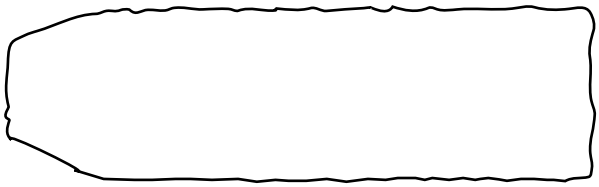
Fig. M8

Dropping envelope level at the end of track.

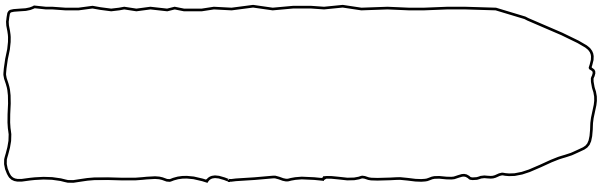
Fig. M9

Envelope is adjusted properly. (No envelope drop)

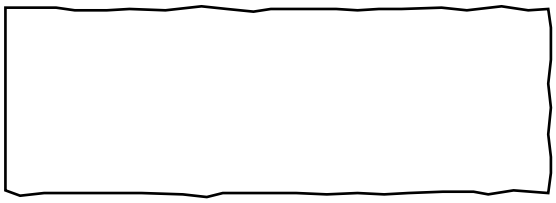
Fig. M10

Note: Upon completion of the adjustment of Guide Rollers [2] and [3] (Refer to Fig. M3), check the X Value by pushing the “CH UP” or “CH DOWN” buttons on the unit alternately, to check the symmetry of the envelope. Check the number of pushes to ensure preset position. The number of pushes of the “CH UP” button on the unit to achieve 1/2 level of envelope should match the number of pushes of the “CH DOWN” button on the unit from center. If required, redo the “X Value Alignment.”

1-D. Azimuth Alignment of Audio/Control/ Erase Head

Purpose:

To correct the Azimuth alignment so that the Audio/ Control/Erase Head meets tape tracks properly.

Symptom of Misalignment:

If the position of the Audio/Control/Erase Head is not properly aligned, the Audio S/N Ratio or Frequency Response will be poor.

1. Connect the oscilloscope to the audio output jack on the rear side of the deck.
2. Playback the alignment tape (9965 000 14515) and confirm that the audio signal output level is 8kHz.
3. Adjust Azimuth Adj. Screw so that the output level on the AC Voltmeter or the waveform on the oscilloscope is at maximum. (Fig. M6)

Note: Upon completion of the adjustment of Azimuth Adj. Screw, check the X Value by pushing the “CH UP” or “CH DOWN” buttons on the unit alternately, to check the symmetry of the envelope. Check the number of pushes to ensure preset position. The number of pushes of the “CH UP” button on the unit to achieve 1/2 level of envelope should match the number of pushes of the “CH DOWN” button on the unit from center. If required, redo the “X Value Alignment.”

1-E. Checking and Alignment of Tape Path during reversing

Purpose: To make sure that the tape path is well stabilized during reversing.

Symptom of Misalignment: If the tape path is unstable during reversing, the tape will be damaged.

Note: Do not use an Alignment Tape for this procedure. If the unit is not correctly aligned, the tape may be damaged.

1. Insert a blank cassette tape into the tray and set the unit to REV. Then confirm if the tape has been curled up or bent at the Take-up Guide Post[4] or REV Post[5]. (Refer to Fig. M11 and M12.)
2. When the tape has been curled up or bent, turn the alignment screw to adjust the height of REV Post. (Refer to Fig. M11 and M13.)

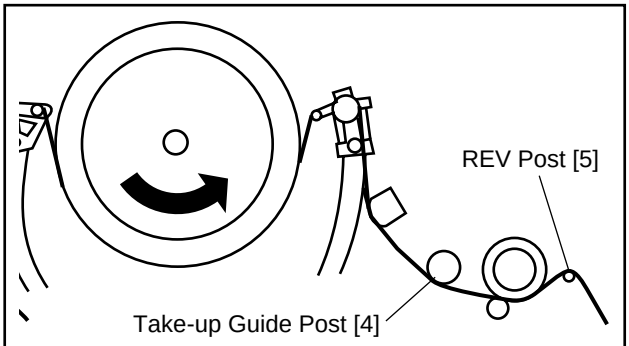

Fig. M11

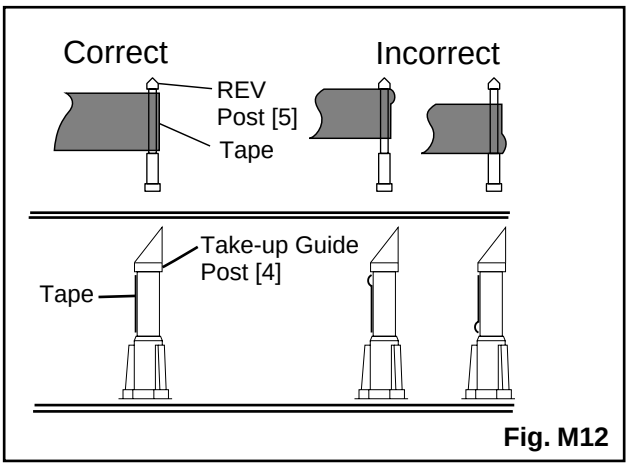

Fig. M12

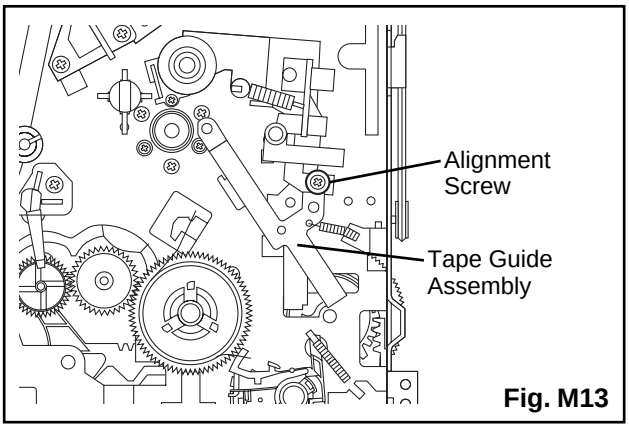

Fig. M13

DISASSEMBLY/ASSEMBLY PROCEDURES OF DECK MECHANISM

Before following the procedures described below, be sure to remove the deck assembly from the cabinet. (Refer to CABINET DISASSEMBLY INSTRUCTIONS.)
All the following procedures, including those for adjustment and replacement of parts, should be done in Eject mode; see the positions of [44] and [45] in Fig. DM1H on page 2-4-3. When reassembling, follow the steps in reverse order.

STEP /LOC. No.	STARTING No.	PART		REMOVAL		INSTALLATION
				Fig. No.	REMOVE/*UNHOOK/ UNLOCK/RELEASE/ UNPLUG/DESOLDER	ADJUSTMENT CONDITION
[1]	[1]	Guide Holder A	T	DM3H	2(S-1)	
[2]	[1]	Cassette Holder Assembly	T	DM4H		
[3]	[2]	Slider (SP)	T	DM5H	(S-1A), *(L-1)	
[4]	[2]	Slider (TU)	T	DM5H	*(L-2)	
[5]	[4]	Lock Lever	T	DM5H	*(L-3), *(P-1)	
[6]	[2]	Cassette Plate	T	DM5H		
[7]	[7]	Cylinder Assembly	T	DM1H, DM6H	Desolder, 3(S-2)	
[8]	[8]	Loading Motor Assembly	T	DM1H, DM7H	Desolder, LDG Belt, 2(S-3)	
[9]	[9]	ACE Head Assembly	T	DM1H, DM7H	(S-4)	
[10]	[2]	Tape Guide Arm Assembly	T	DM1H, DM8H-1	*(P-2)	
[11]	[10]	C Door Opener	T	DM1H, DM8H-1	(S-4A), *(L-4)	
[12]	[11]	Pinch Arm (B)	T	DM1H, DM8H-1, DM8H-2	*(P-3)	
[13]	[12]	Pinch Arm (A) Assembly	T	DM1H, DM8H-1, DM8H-2		
[14]	[14]	FE Head	T	DM1H, DM9H	(S-5)	
[15]	[15]	Prism	T	DM1H, DM9H	(S-6)	
[16]	[2]	Slider Shaft	T	DM10H	*(L-5)	
[17]	[16]	C Drive Lever (SP)	T	DM10H		
[18]	[16]	C Drive Lever (TU)	T	DM10H	(S-7), *(P-4)	
[19]	[19]	Capstan Motor	B	DM2H, DM11H	3(S-8), Cap Belt	
[20]	[20]	Clutch Assembly (HI)	B	DM2H, DM12H	(C-1)	
[21]	[20]	Center Gear	B	DM12H		
[22]	[22]	F Brake Assembly (HI)	B	DM2H, DM12H	*(L-6)	
[23]	[22]	Worm Holder	B	DM2H, DM13H-1	(S-9), *(L-7), *(L-8)	
[24]	[22]	Pulley Assembly (HI)	B	DM2H, DM13H-1		
[25]	[25]	Mode Gear (LM)	B	DM2H, DM13H-1	(C-2)	
[26]	[20],[25]	Mode Lever (HI)	B	DM2H, DM13H-1, DM13H-2	(C-3)	
[27]	[22],[23], [26]	Cam Gear (A) (HI)	B	DM2H, DM13H-1, DM13H-2	(C-4)	(+)Refer to Alignment Sec.Page 2-5-1
[28]	[26]	TR Gear C	B	DM2H, DM13H-1	(C-5)	
[29]	[28]	TR Gear Spring	B	DM13H-1		
[30]	[29]	TR Gear A/B	B	DM13H-1		
[31]	[31]	FF Arm (HI)	B	DM1H, DM14H		
[32]	[26]	Idler Assembly (HI)	B	DM1H, DM14H	*(L-9)	
[33]	[26]	BT Arm	B	DM2H, DM14H	*(P-5)	

STEP /LOC. No.	START-ING No.	PART		REMOVAL		INSTALLATION
				Fig. No.	REMOVE/*UNHOOK/ UNLOCK/RELEASE/ UNPLUG/DESOLDER	ADJUSTMENT CONDITION
[34]	[26]	Loading Arm (SP) Assembly	B	DM2H, DM14H		(+)Refer to Alignment Sec.Page 2-5-1
[35]	[34]	Loading Arm (TU) Assembly	B	DM2H, DM14H		(+)Refer to Alignment Sec.Page 2-5-1
[36]	[16],[26]	M Brake (TU) Assembly (HI)	T	DM1H, DM15H		
[37]	[2],[26]	M Brake (SP) Assembly (HI)	T	DM1H, DM15H	*(P-6)	
[38]	[37]	Tension Lever Assembly	T	DM1H, DM15H		
[39]	[38]	T Lever Holder	T	DM15H	*(L-10)	
[40]	[40]	M Gear (HI)	T	DM1H, DM15H	(C-6)	
[41]	[15],[40]	Sensor Gear (HI)	T	DM1H, DM15H	(C-7)	
[42]	[36],[40]	Reel T	T	DM1H, DM15H		
[43]	[38]	Reel S	T	DM1H, DM15H		
[44]	[34],[38]	Moving Guide S Preparation	T	DM1H, DM16H	(S-11), Slide Plate	
[45]	[35]	Moving Guide T Preparation	T	DM1H, DM16H		
[46]	[19]	TG Post Assembly	T	DM1H, DM16H	*(L-11)	
[47]	[27]	Rack Assembly	R	DM17H		(+)Refer to Alignment Sec.Page 2-5-1
[48]	[47]	F Door Opener	R	DM17H		
[49]	[49]	Cleaner Assembly	T	DM1H, DM6H		
[50]	[49]	CL Post	T	DM6H	*(L-12)	
↓ (1)	↓ (2)	↓ (3)	↓ (4)	↓ (5)	↓ (6)	↓ (7)

(1): Follow steps in sequence. When reassembling, follow the steps in reverse order.
These numbers are also used as identification (location) No. of parts in the figures.

(2): Indicates the part to start disassembling with in order to disassemble the part in column (1).

(3): Name of the part

(4): Location of the part: T=Top B=Bottom R=Right L=Left

(5): Figure Number

(6): Identification of parts to be removed, unhooked, unlocked, released, unplugged, unclamped, or desoldered.
P=Spring, W=Washer, C=Cut Washer, S=Screw, *=Unhook, Unlock, Release, Unplug, or Desolder
e.g., 2(L-2) = two Locking Tabs (L-2).

(7): Adjustment Information for Installation
(+):Refer to Deck Exploded Views for lubrication.

.

Top View

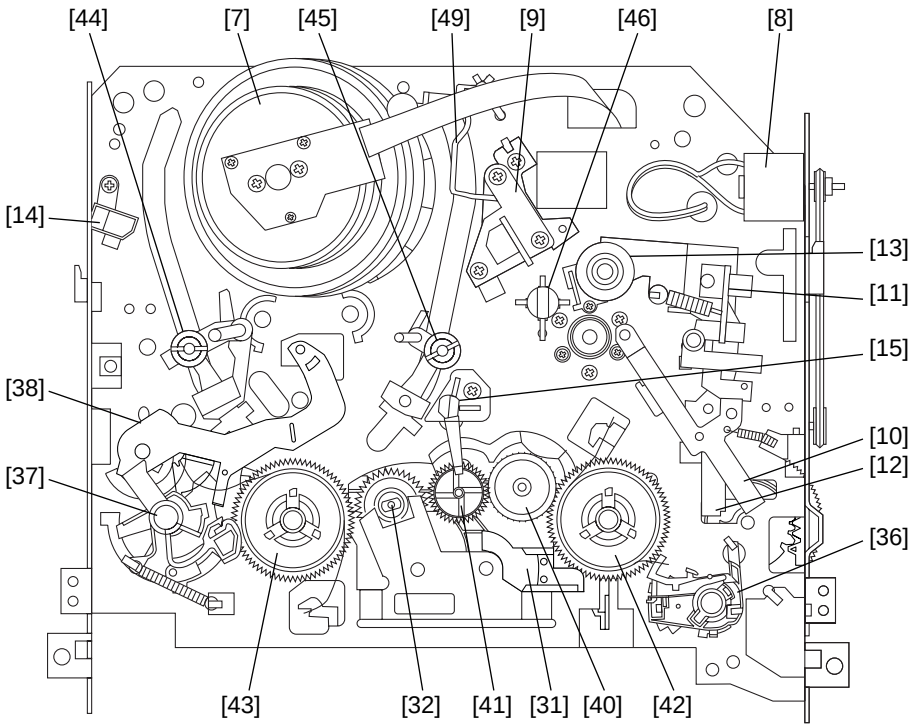

Fig. DM1H

Bottom View

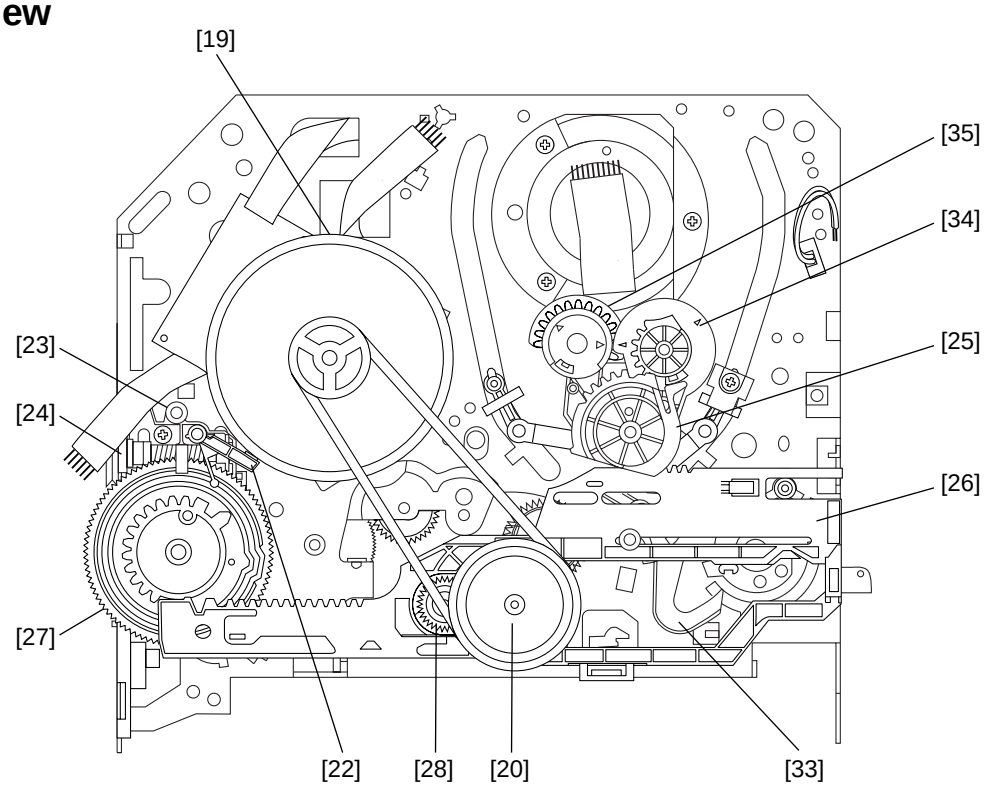

Fig. DM2H

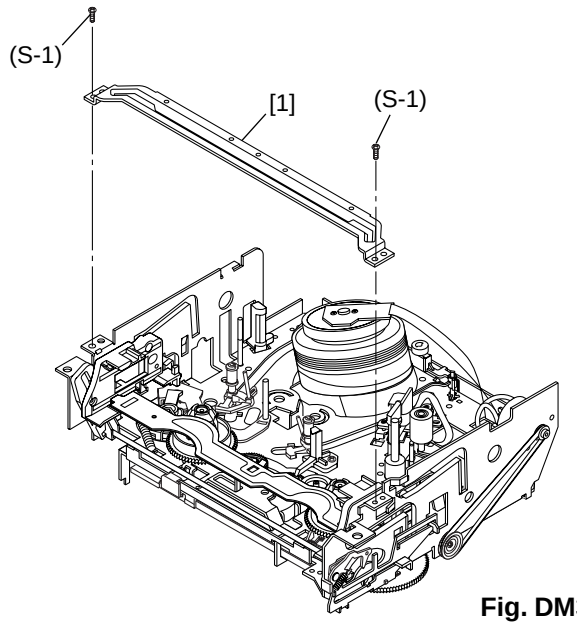

Fig. DM3H

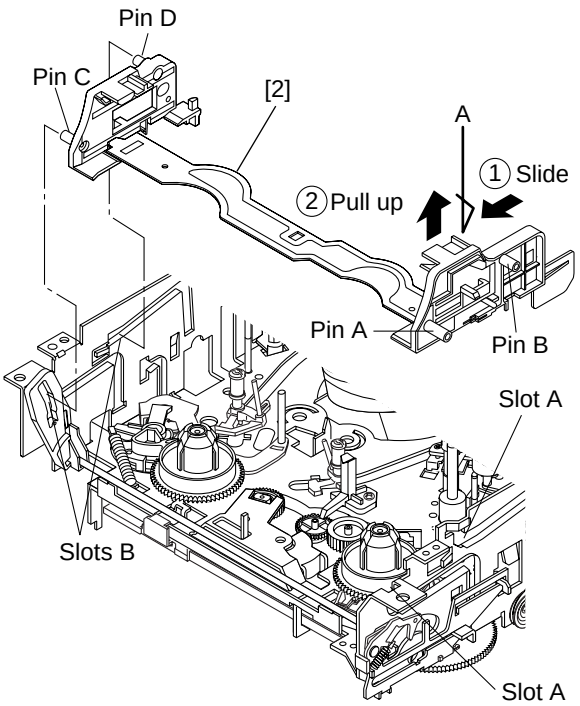

First, while pushing the locking tab as shown in the right, slide and pull up the right side on [2] to release Pin A and Pin B from the slots A.
Then, remove Pin C and Pin D on [2] from the slots B as shown.

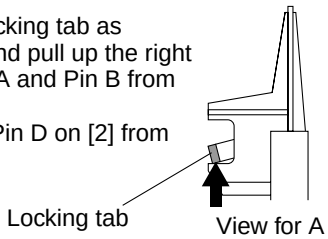

Fig. DM4H

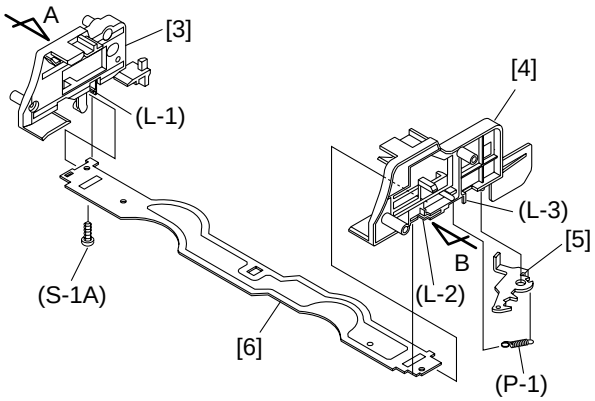

Installation of [3] and [6]

First, insert [6] diagonally in [3] as shown below. Then, install [6] in [3] while pushing (L-1) in the direction of the arrow. After installing [6] in [3], confirm that pin A of [3] enters hole A of [6] properly.

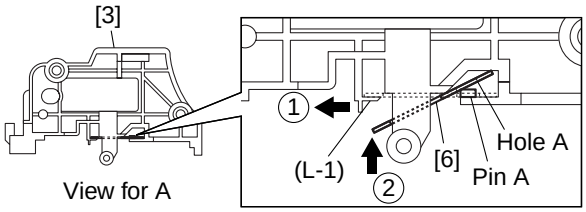

Installation of [4] and [6]

Install [6] in [4] while pulling (L-2) in the direction of the arrow. After installing [6] in [4], confirm that pin B of [4] enters hole B of [6] properly.

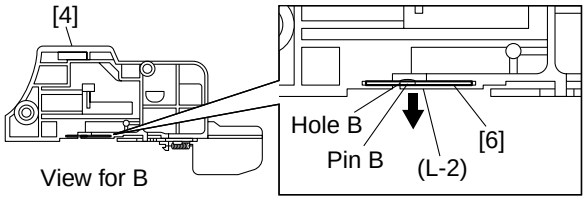

Fig. DM5H

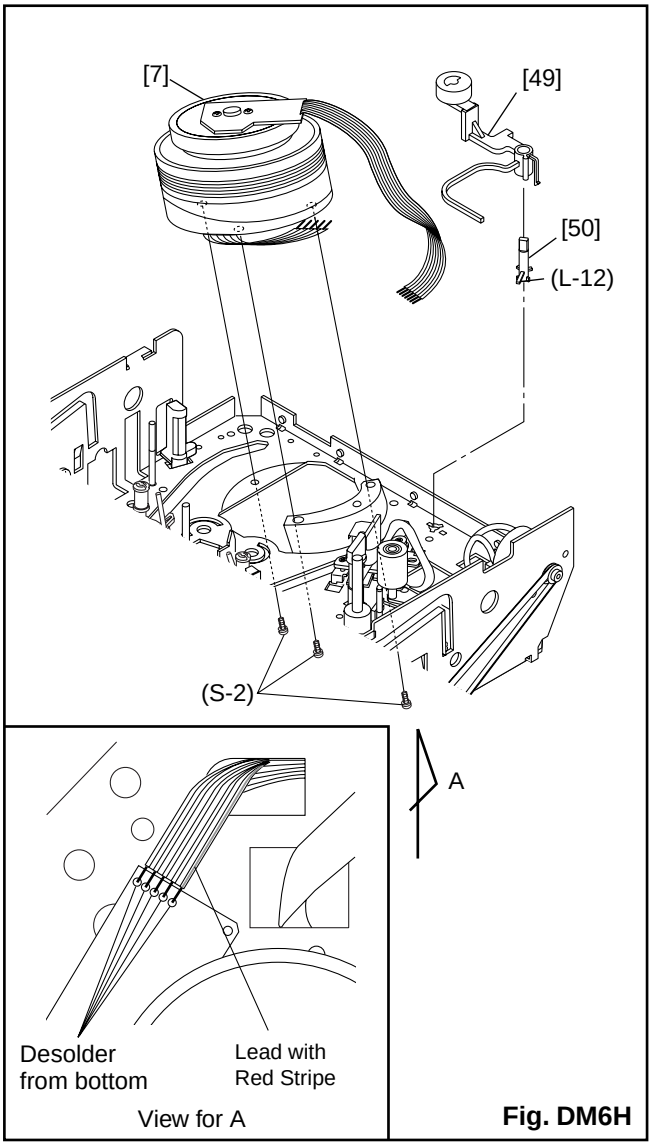

Fig. DM6H

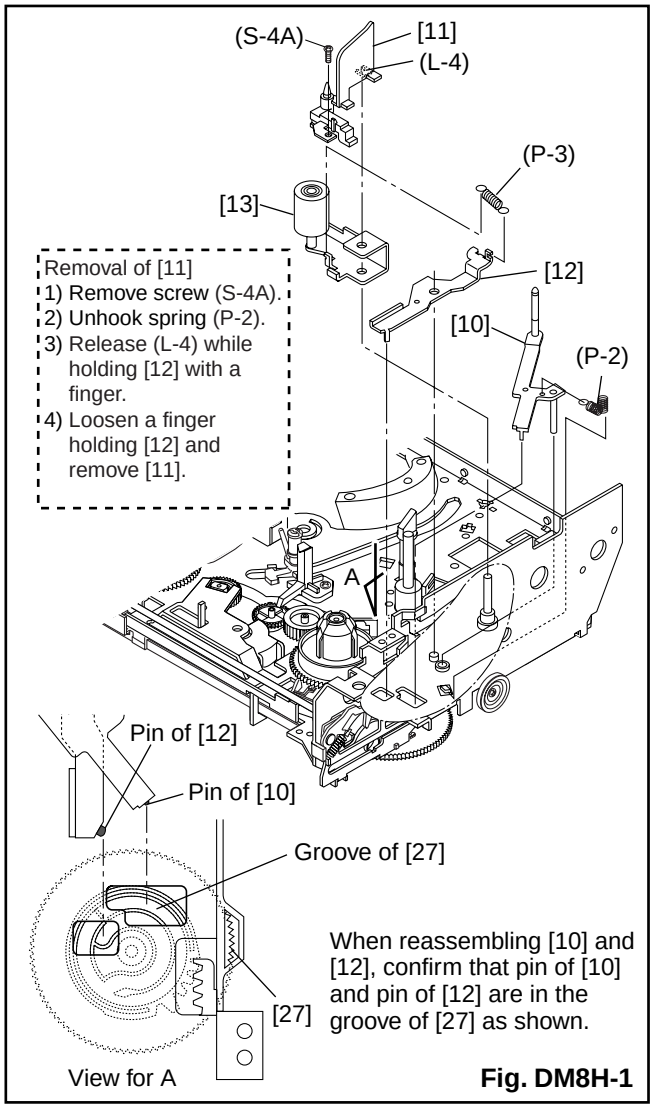

Fig. DM8H-1

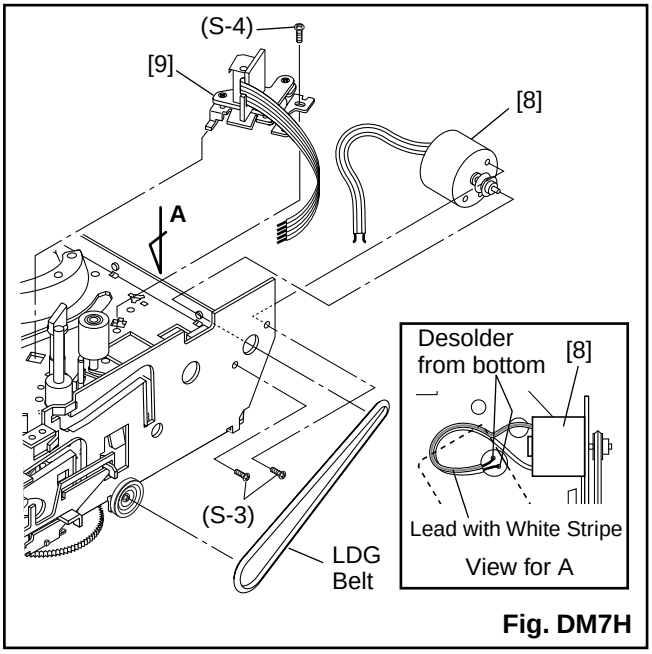

Fig. DM7H

Installation of [13] and [12]

Hook spring (P-3) up to [12] and [13], then install them to the specified position so that [12] will be floated slightly while holding [12] and [13]. (Refer to Fig. A.)

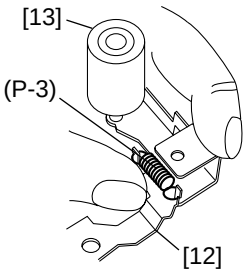

Fig. A

Install pin of [12] in groove of [27]. (Refer to Fig. B.)

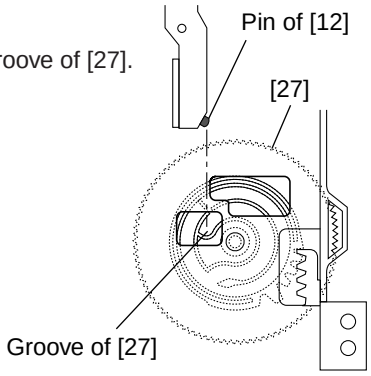

Fig. B (Top view)

Press both [12] and [13] till the groove of chassis pin appears, and adjust [13] to the notch of chassis. Then turn [13] a little in the direction of the arrow while pressing [12]. (Refer to Fig. C.)

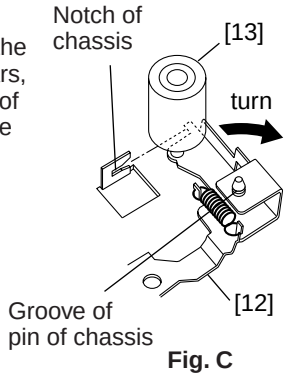

Fig. C

Install [11] and [10] while holding [12]. (Refer to Fig. DM8H-1.)

Fig. DM8H-2

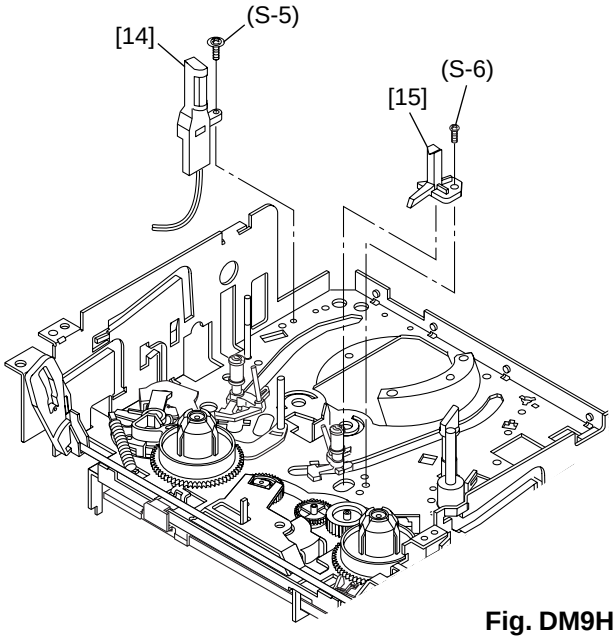

Fig. DM9H

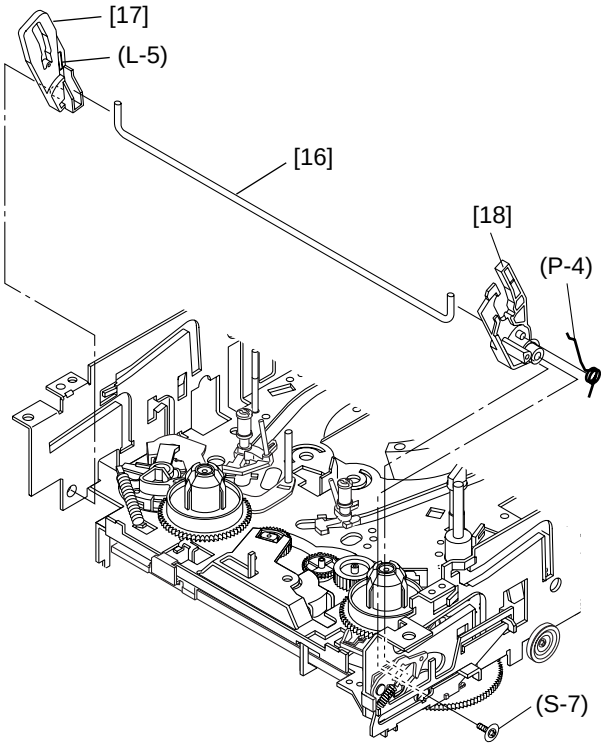

Fig. DM10H

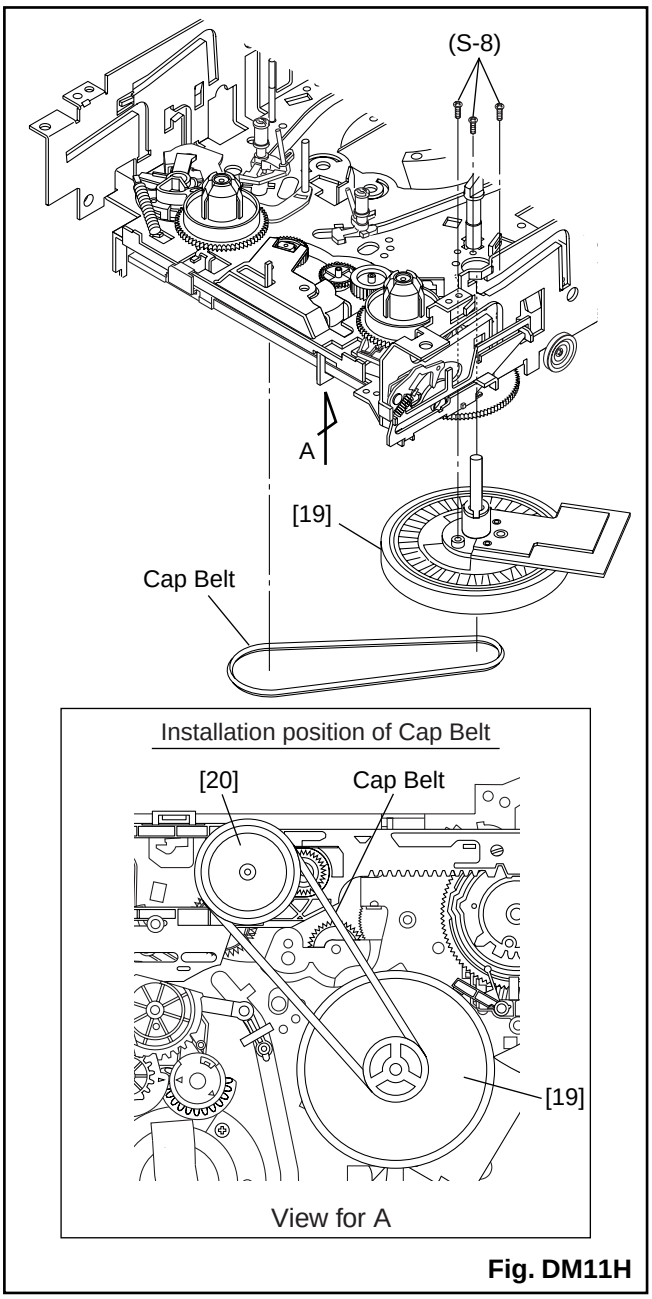

Fig. DM11H

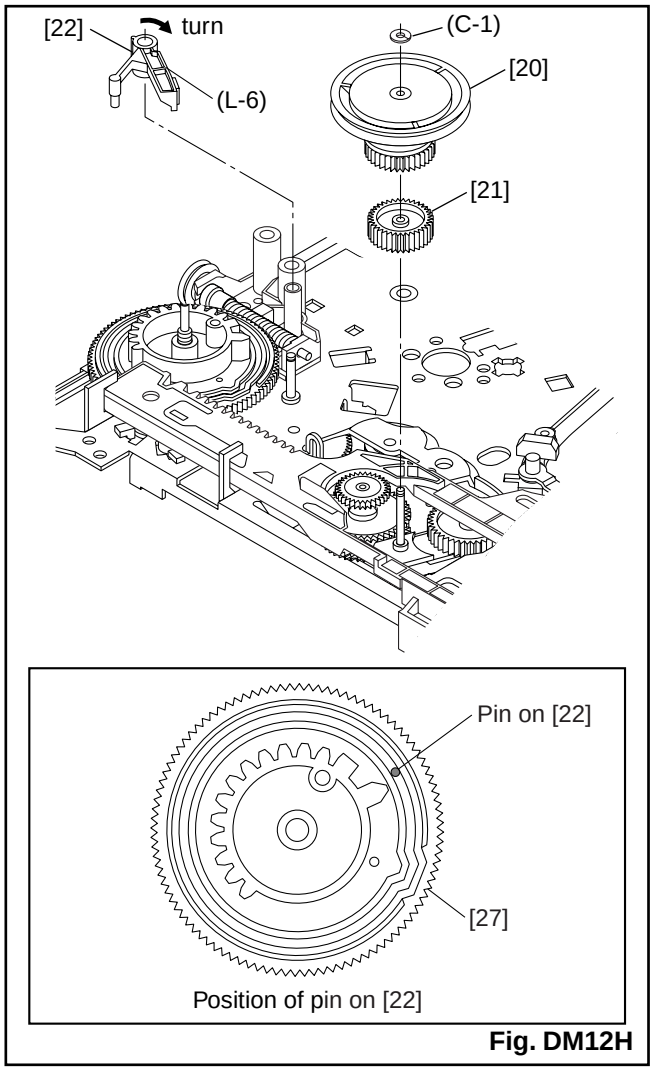

Fig. DM12H

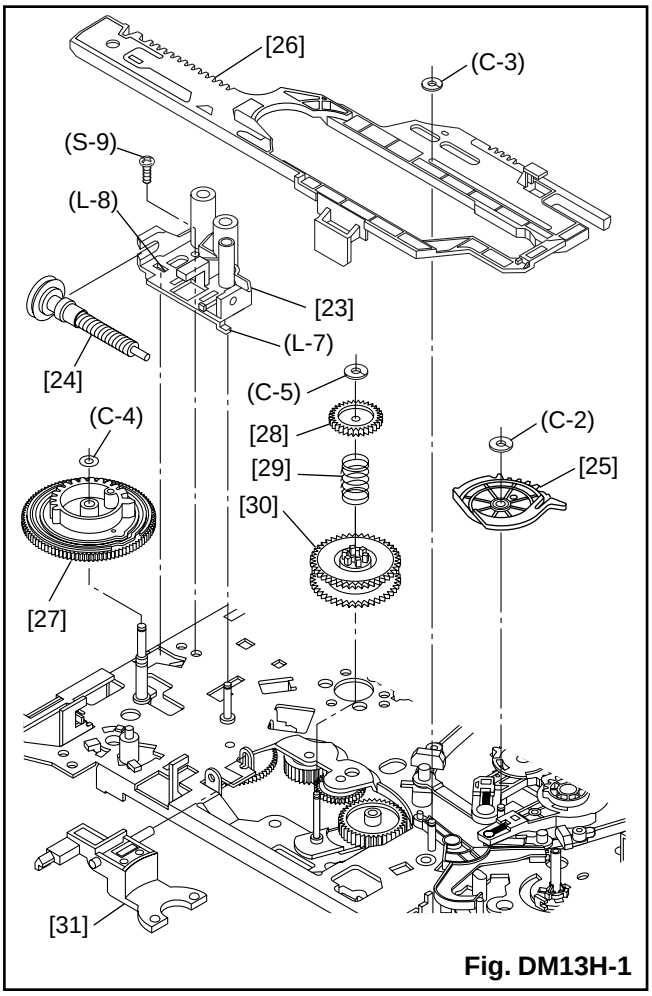

Fig. DM13H-1

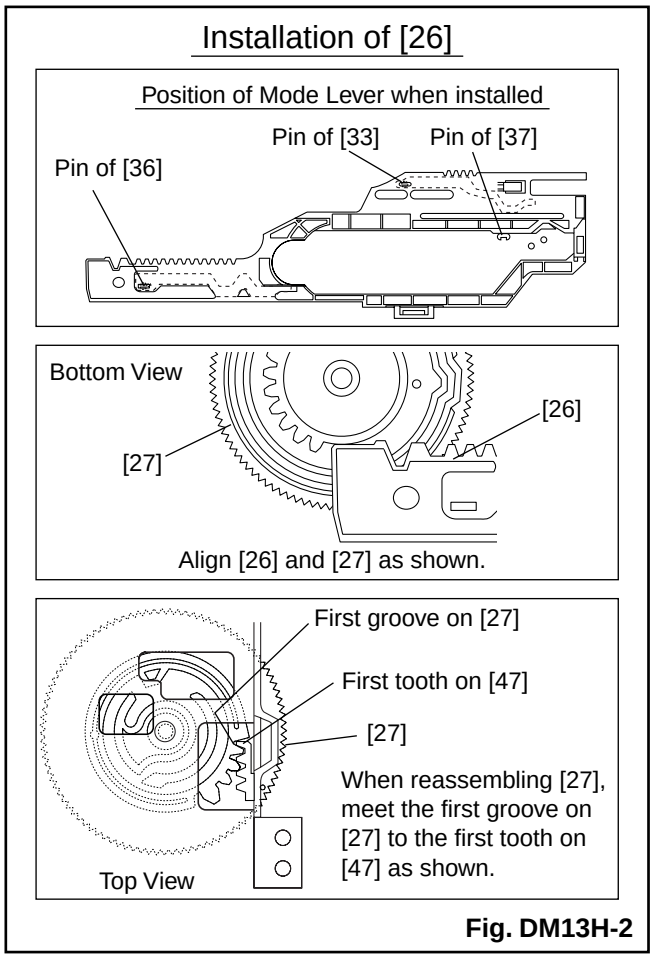

Fig. DM13H-2

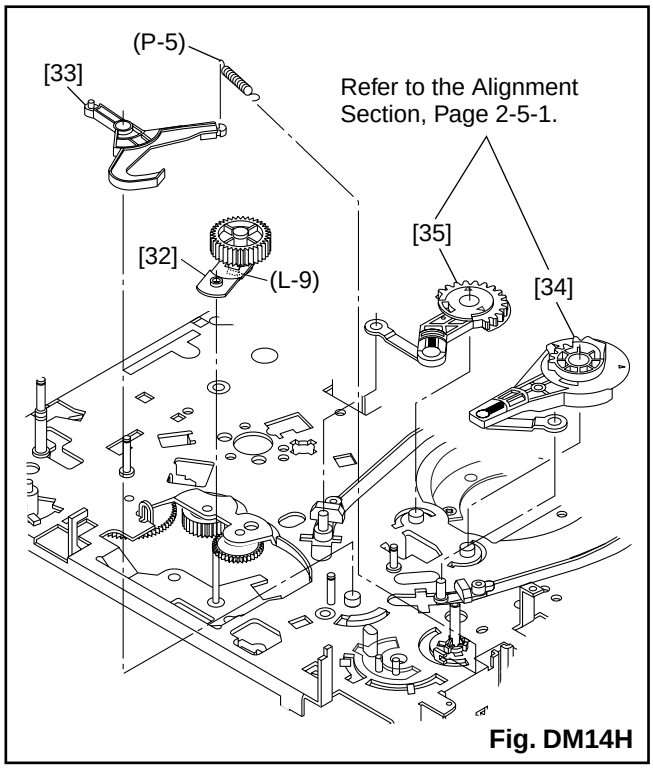

Fig. DM14H

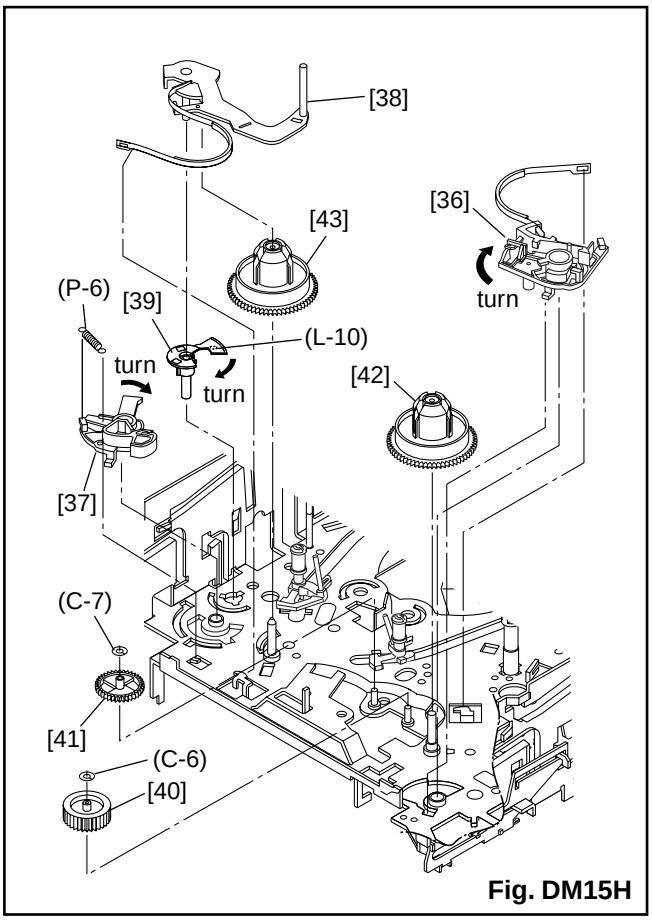

Fig. DM15H

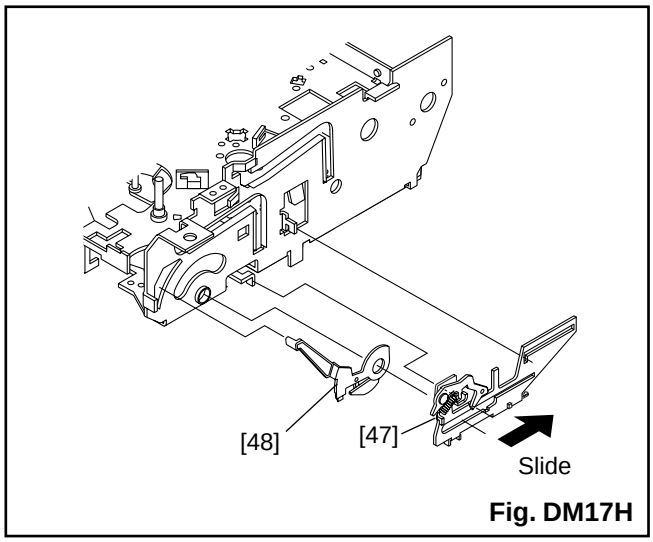

Fig. DM17H

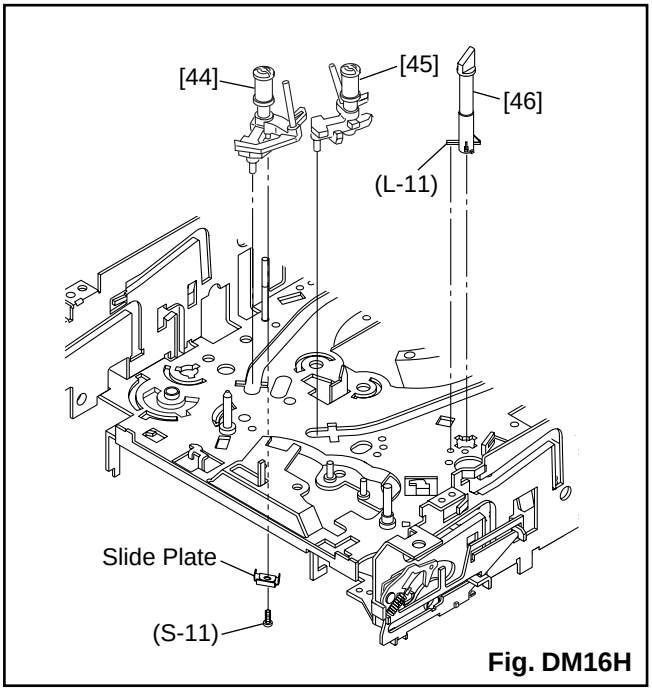

Fig. DM16H

ALIGNMENT PROCEDURES OF MECHANISM

The following procedures describe how to align the individual gears and levers that make up the tape loading/unloading mechanism. Since information about the state of the mechanism is provided to the System Control Circuit only through the Mode Switch, it is essential that the correct relationship between individual gears and levers be maintained.
All alignments are to be performed with the mechanism in Eject mode, in the sequence given. Each procedure assumes that all previous procedures have been completed.

IMPORTANT:
If any one of these alignments is not performed properly, even if off by only one tooth, the unit will unload or stop and it may result in damage to the mechanical or electrical parts.

Alignment points in Eject Position

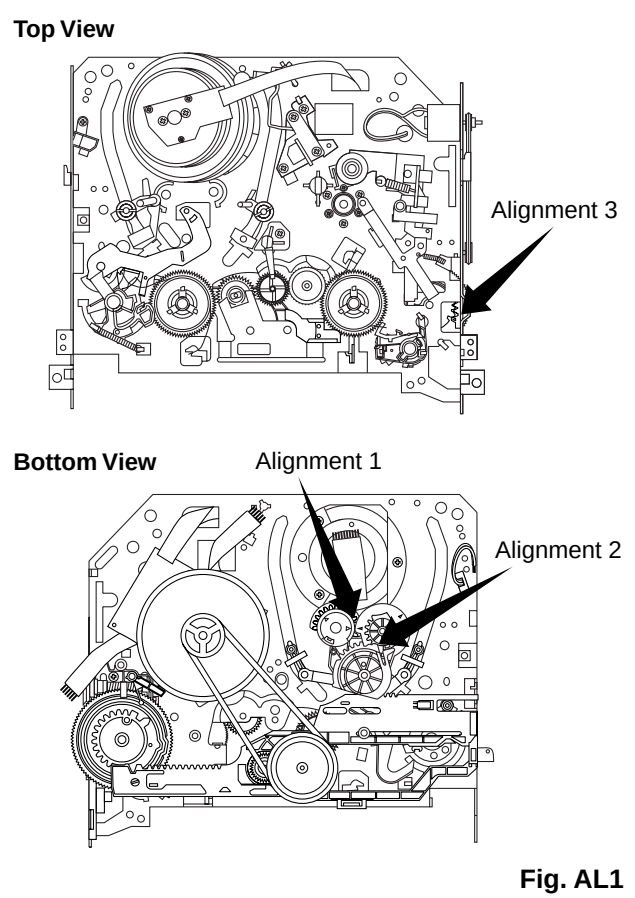

Fig. AL1

Alignment 1

Loading Arm (SP) and (TU) Assembly

Install Loading Arm (SP) and (TU) Assembly so that their triangle marks point to each other as shown in Fig. AL2.

Alignment 2

Mode Gear

Keeping the two triangles pointing at each other, install the Loading Arm (SP) Assembly so that the last tooth of the gear meets the most inside teeth of the Mode Gear. See Fig. AL2.

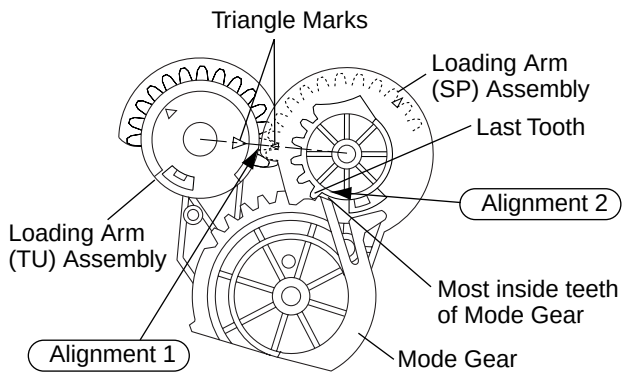

Fig. AL2

Alignment 3

Cam Gear (A) (HI), Rack Assembly

Install the Rack Assembly so that the first tooth on the gear of the Rack Assembly meets the first groove on the Cam Gear (A) (HI) as shown in Fig. AL3.

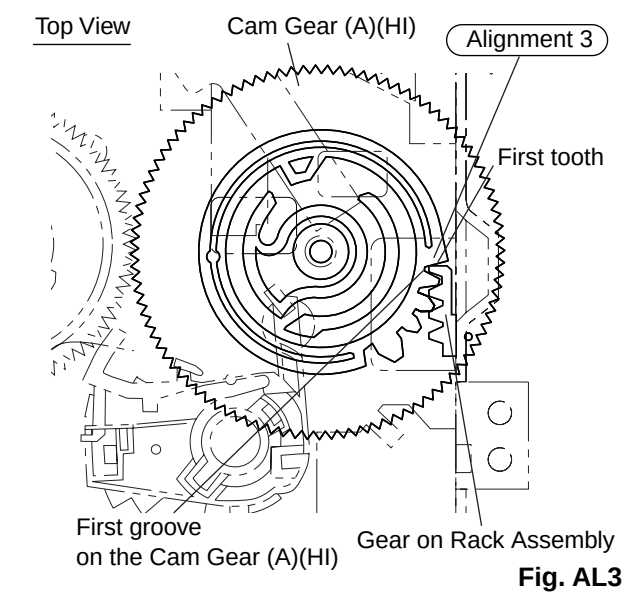

Fig. AL3

DECK EXPLODED VIEWS

Deck Mechanism View 1

Mark	Description
●●●●●	Floil G-684G or Multemp MH-D (Blue grease)
▲▲▲▲▲	SLIDUS OIL #150

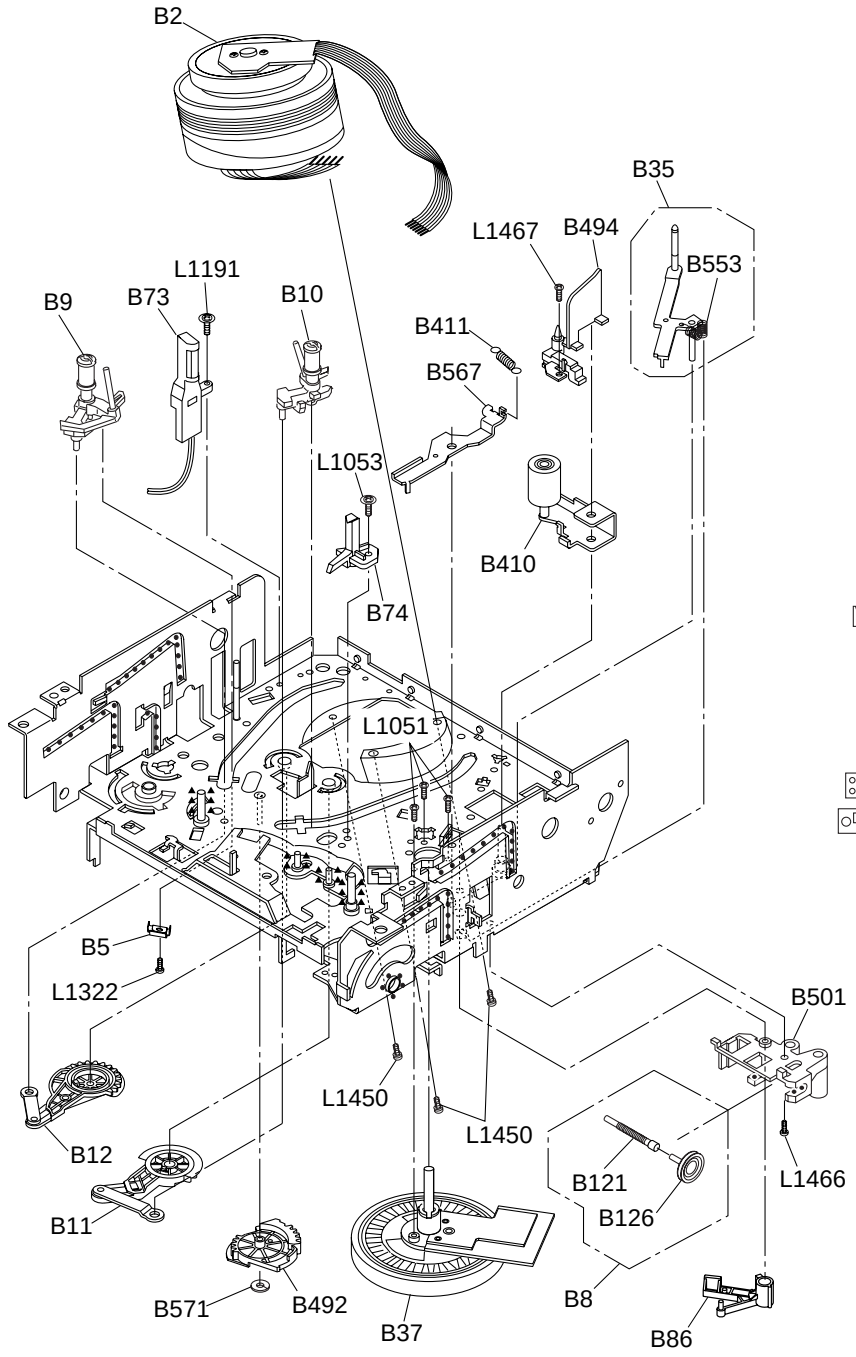

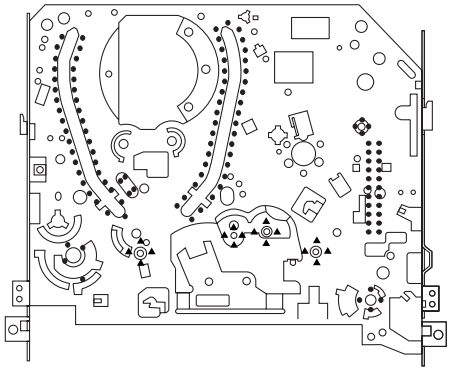

Chassis Assembly
Top View (Lubricating Point)

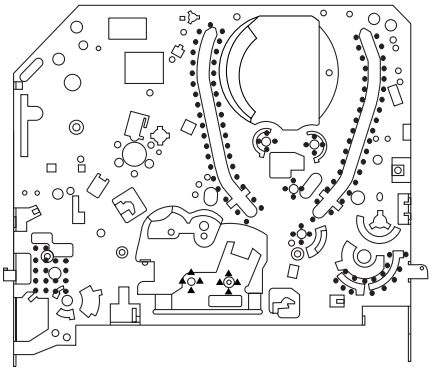

Chassis Assembly
Bottom View (Lubricating Point)

Some Ref. Numbers are not in sequence.

Deck Mechanism View 2

Mark	Description
●●●●●	Floil G-684G or Multemp MH-D (Blue grease)
▲▲▲▲▲	SLIDUS OIL #150
××××××	SANKOUL FG84M (Yellow grease)

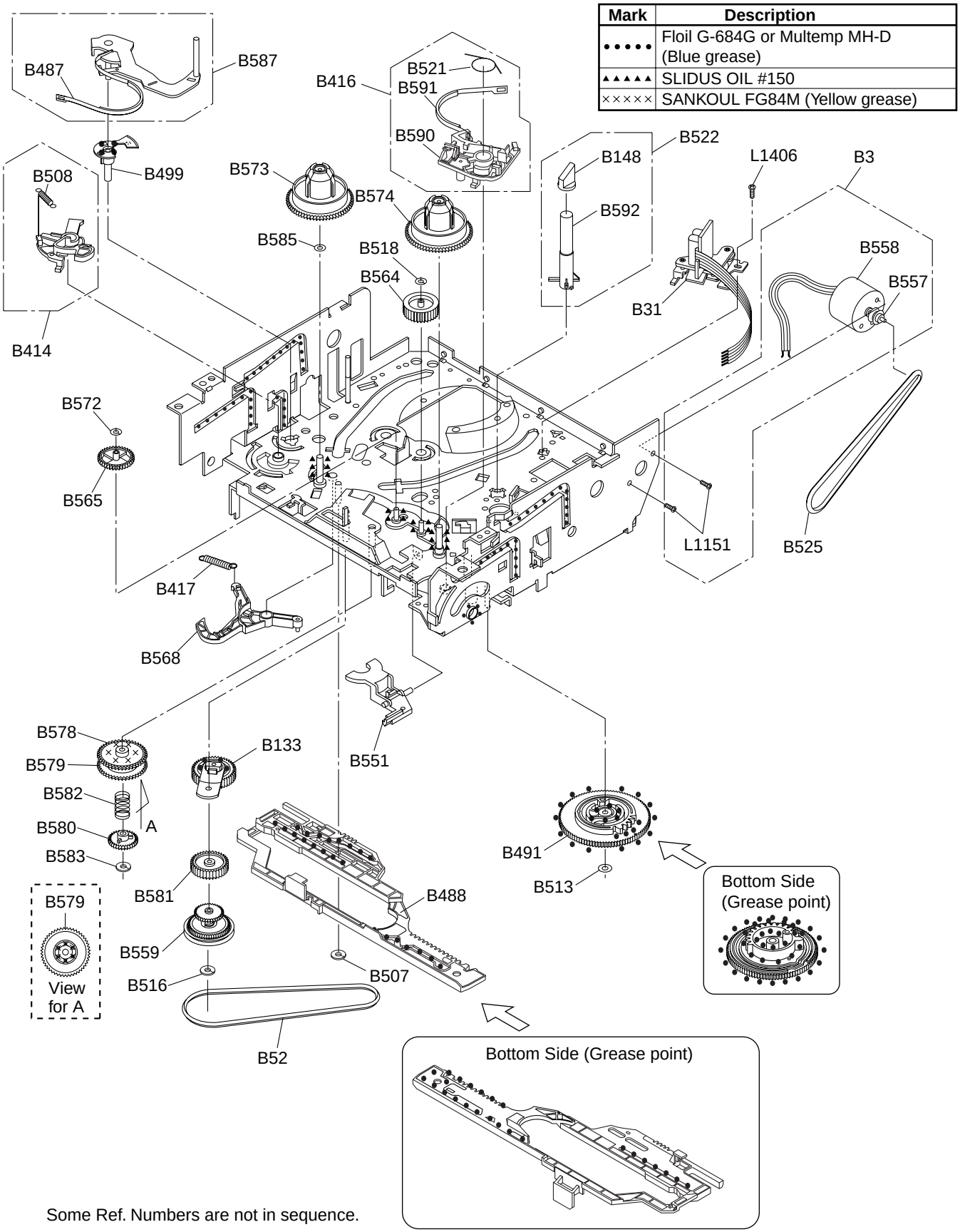

Some Ref. Numbers are not in sequence.

Deck Mechanism View 3

Mark	Description
●●●●●	Floil G-684G or Multemp MH-D (Blue grease)
▲▲▲▲▲	SLIDUS OIL #150

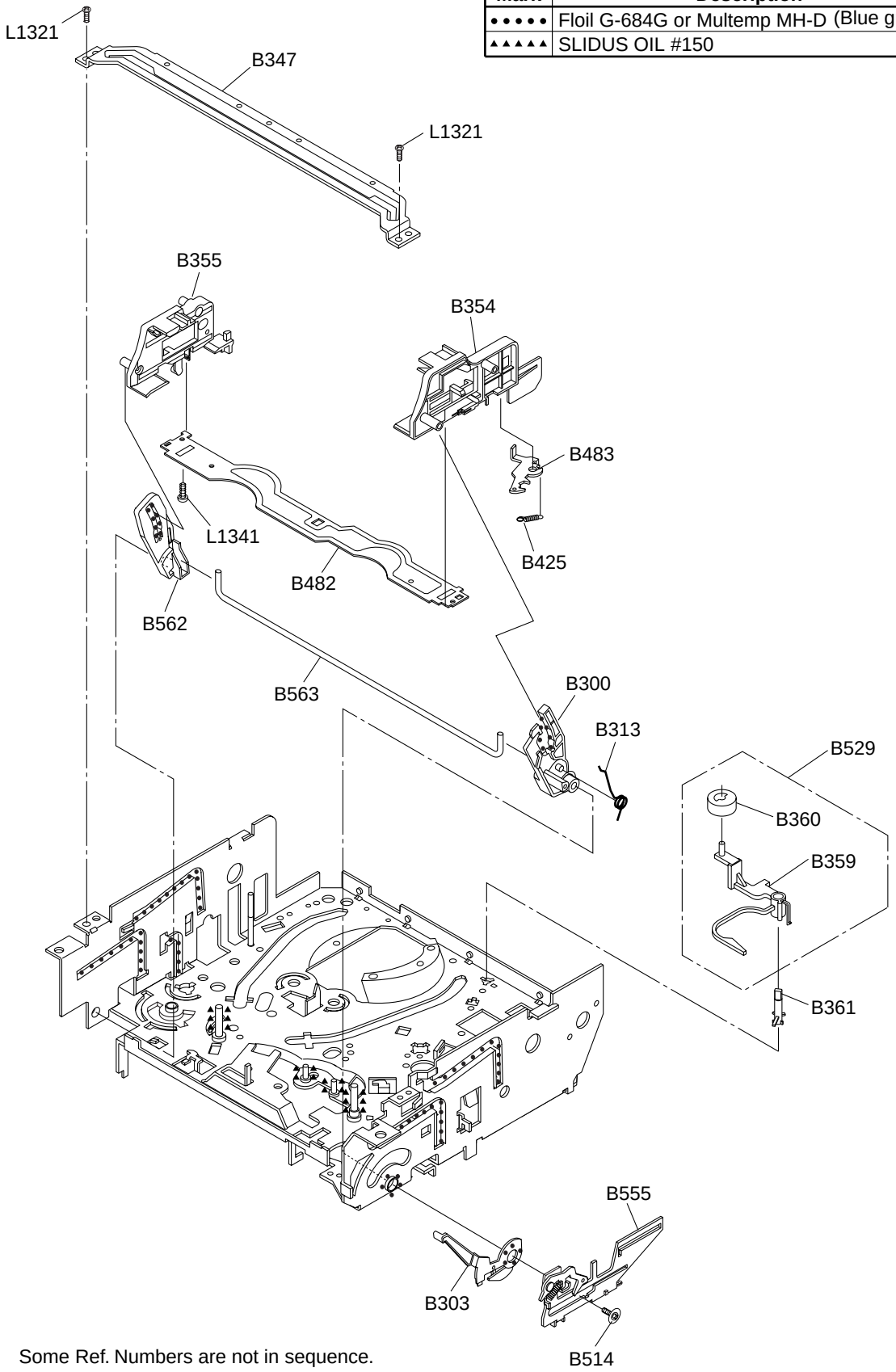

Some Ref. Numbers are not in sequence.

DECK PARTS LIST

DECK PARTS LIST				VCR Module
Pos.No.	⚠	12 NC	Description	
B2			CYLINDER ASSEMBLY MK12.5 PAL 6HD	1
B2			CYLINDER ASSEMBLY MK12.5 PAL 6HD(V)	1
B3			LOADING MOTOR ASSEMBLY MK14	1
B5			SLIDE PLATE MK12.5	1
B8			PULLEY ASSEMBLY(HI) MK12	1
B9			MOVING GUIDE S P.P MK12.5	1
B10			MOVING GUIDE T P.P MK12.5	1
B11			LOADING ARM(TU) ASSEMBLY MK12	1
B12			LOADING ARM(SP) ASSEMBLY MK12	1
B31			AC HEAD ASSEMBLY MK12.5	1
B35			TAPE GUIDE ARM ASSEMBLY MK12.5	1
B37			CAPSTAN MOTOR HI 288/VCZC1301	1
B52			CAP BELT MK10	1
B73			FE HEAD(MK12) HVFHP0047A	1
B73			FE HEAD(MK12) VTR-1X2ERS11-155	1
B73			HEAD FE VTR-1X2ERS11-167	1
B74			PRISM MK10	1
B86			F BRAKE ASSEMBLY(HI) MK12	1
B121			WORM MK12	1
B126			PULLEY MK12	1
B133			IDLER ASSEMBLY(HI) MK12	1
B148			TG CAP MK6	1
B300			C DRIVE LEVER(TU) MK12	1
B303			F DOOR OPENER MK12	1
B313			C DRIVE SPRING MK12	1
B347			GUIDE HOLDER A MK10	1
B354			SLIDER(TU) MK12	1
B355			SLIDER(SP) MK12	1
B359			CLEANER LEVER MK10	1
B360			CLEANER ROLLER MK9	1
B361			CL POST MK10	1
B410			PINCH ARM(A) ASSEMBLY(5) MK12	1
B411			PINCH SPRING MK12	1
B414			M BRAKE(SP) ASSEMBLY(HI) MK12	1
B414			M BRAKE SP ASSEMBLY HI MK14	1
B416			M BRAKE(TU) ASSEMBLY(HI) MK12	1
B417			TENSION SPG(3002645) MK12.5	1
B425			LOCK LEVER SPRING MK10	1
B482			CASSETTE PLATE	1
B483			LOCK LEVER MK12	1
B487			BAND BRAKE(SP) MK12.5	1
B488			MODE LEVER(HI) MK12.5	1
B491			CAM GEAR(A)(HI) MK12	1
B492			MODE GEAR(LM) MK12	1
B494			C DOOR OPENER MK12	1
B499			T LEVER HOLDER MK12	1
B501			WORM HOLDER MK12	1
B501			WORM HOLDER(R) MK12	1
B507			REEL WASHER MK9 5*2.1*0.5	1
B508			S BRAKE SPRING(HI) MK12	1
B513			P.S.W F 6*2.55*0.5	1
B514			SCREW RACK MK14	1
B516			REEL WASHER MK9 5*2.1*0.5	1
B518			P.S.W CUT 1.6X4.0X0.5T	1
B521			REV BRAKE SPG(HI) MK12	1
B522			TG POST ASSEMBLY MK10	1
B525			LDG BELT MK11	1
B529			CLEANER ASSEMBLY MK10	1
B551			FF ARM(HI) MK12	1

DECK PARTS LIST				VCR Module
Pos.No.	⚠	12 NC	Description	
B553			REV SPRING MK11	1
B555			RACK ASSEMBLY MK14	1
B557			MOTOR PULLEY U5	1
B558			LOADING MOTOR RF-500TB-12560	1
B558			LOADING MOTOR M31E-1 R-14 7441	1
B559			CLUTCH ASSEMBLY(HI) MK12	1
B562			C DRIVE LEVER(SP) MK12	1
B563			SLIDER SHAFT MK12	1
B564			M GEAR(HI) MK12	1
B565			SENSOR GEAR(HI) MK12	1
B567			PINCHI ARM(B) ASSEMBLY MK12.5	1
B568			BT ARM MK12	1
B571			P.S.W CUT 1.6X4.0X0.5T	1
B572			P.S.W CUT 1.6X4.0X0.5T	1
B573			REEL S MK11	1
B574			REEL T MK10	1
B578			TR GEAR A MK10	1
B579			TR GEAR B MK12	1
B580			TR GEAR C MK12	1
B581			CENTER GEAR MK11	1
B582			TR GEAR SPRING MK10	1
B583			CAM WASHER MK12	1
B585			PSW(317505) MK11	1
B587			TENSION LEVER ASSEMBLY MK12	1
B590			BRAKE ARM(TU) MK12	1
B591			BAND BRAKE(TU) MK12	1
B592			TG POST MK10	1
L1051			SCREW B-TIGHT M2.6X6 PAN HEAD+	1
L1053			SCREW S-TIGHT M2.6X8 WASHER HEAD+	1
L1151			SCREW SEMS M2.6X4 PAN HEAD+	1
L1191			SCREW S-TIGHT M2.6X8 WASHER HEAD+	1
L1321			SCREW S-TIGHT M3X6 BIND HEAD+	1
L1322			SCREW B-TIGHT M2.3X4 BIND HEAD+	1
L1341			SCREW P-TIGHT M2X6 PAN HEAD+	1
L1406			AC HEAD SCREW MK14	1
L1450			SCREW SEMS M2.6X5 PAN HEAD+	1
L1466			SCREW S-TIGHT M2.6X6 BIND HEAD+	1
L1467			SCREW M2.6X5 WASHER HEAD+	1